Series 6, , 8 kg, 1400 / WUU28480HK

WMZ20430 :
WMZ2381 :

, EcoSilence Drive™, ,

- **AntiVibration Design**
- **Vario Drum** : ,
- :
- **9 0**
- **Quick 15/30 1 5 / 3 0** :

/ : .....
: .....
/ : .....
: ..... 210 cm
: 845
: 845x598x590
Wheels: .....No
: 74.6
: 65
Door frame colour: .....Silver-black grey
[1]: .....55 dB(A) re 1pW ( )
: 2300
: ..... 10 A
: 220-240
: 50
ENERGY STAR® certified: ..... No
Cord included: .....Yes
: .....
Length of supply hose (in): .....59.05 "
Dimensions of the packed product: ..... 34.27 x 25.70 x 27.23
: .....164.000 lbs
Gross weight: ..... 166.000 lbs
(x x) : 870x653x691
Gross weight: 75.5
: 2300
: ..... 10 A
: 220-240
: 50
: .....Multiple water protection
: .....1400 /
: .....
: .....Yes
: ..... LED-display, LED
Maximum capacity in kg (EU 2017/1369): 8.0
Spin-drying efficiency class of eco 40-60 programme (EU 2017/1369): ..... B
Airborne acoustical noise emission class (EU 2017/1369): .....A

---

4 242005 360598

[1]

Series 6, , 8 kg, 1400 / WUU28480HK

, EcoSilence Drive™, ,

- WUU28480HK
- : 8
- : 1400 /
- 19, 50%*

- WD14S468HK , 82,
- VarioDrum:
- SpeedPerfect :
- LED
- ActiveWater Plus™: ,
-
-
-
-
- AquaStop
- Multiple water protection
-
-
-

- 15'/30' / , //

- (24)

- (XX) : 84.5 x 59.8 x 59.0 *
- : 63.2
- , /
- (XX) : 82cm x 59.8cm x 59.9cm* ( )
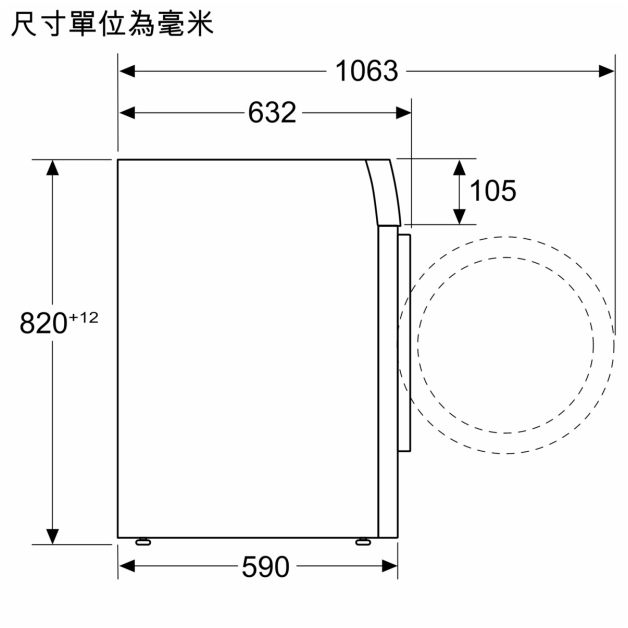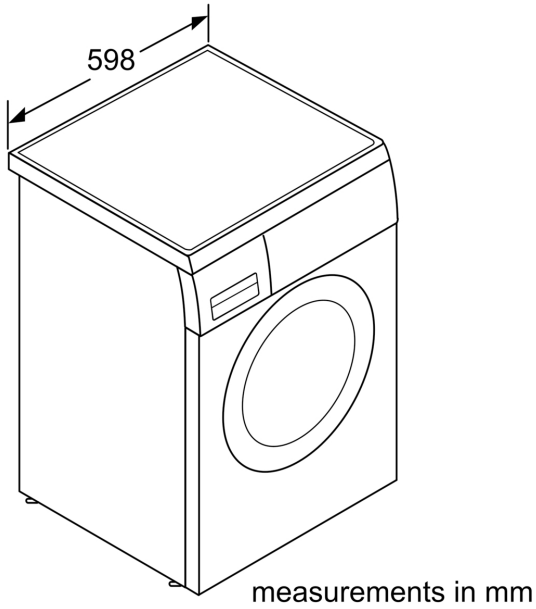
Series 6, , 8 kg, 1400 /
WUU28480HK