Handleless drawer
Cushioned closing system
Hygienic stainless steel interior with glass bottom
Direct temperature selection in the range 30 °C to 80 °C.
For slow cooking, dough proofing, herbs and fruits drying, chocolate melting and defrosting

Heating methods
Slow cooking.
Keeping meals warm.
Warming cookware/plates.
Cups and plates warming.
Direct temperature control.
Personalisation function via Home Connect.
16 additional programmes via Home Connect.

Handling
Touch key operation.
Recessed grip at the front bottom of the drawer.

Features
Net volume 20 litres.
Volume capacity: Dinner service for 6 people including ø 27 cm plates and soup bowls, additional bowls and a serving dish depending on size.
Capacity load max. 25 kg.
Usable interior dimensions
W 547 mm x H 91 mm x D 410 mm.
Heating under glass bottom for easy cleaning.
Heating system for even heat distribution and stable cavity temperature.
Status display, visible in the glass front.
Glass bottom made of safety glass.
Heating timer via Home Connect.
Specific recipes via Home Connect.
Home network integration for digital services (Home Connect) wireless via WiFi.
The use of the Home Connect functionality depends on the Home Connect services, which are not available in every country. For further information please check: home-connect.com.

Planning notes
The panel surface of the appliance extends 47 mm from the furniture cavity.
Installation of BS/BM/CM directly above WS in 59 cm niche without intermediate floor.
The socket can be planned behind the appliance.

Connection
Total connected load 0.82 KW.
Connection cable 1.75 m, detachable.

Color Variants

WS461112

Characteristics

Built-in / Free-standing	Built-in
Maximum number of plates	
Maximum number of espresso cups	64
Dimensions	140x590x514
Dimensions of the packed product (HxWxD)	260x650x700
Required niche size for installation (HxWxD)	140 x 560 x 550
EAN code	4242006299293
Fuse protection	10
Voltage	220-240
Frequency	50; 60
Plug type	Gardy plug w/ earthing
Included accessories	

Consumption and connection features

GAGGENAU

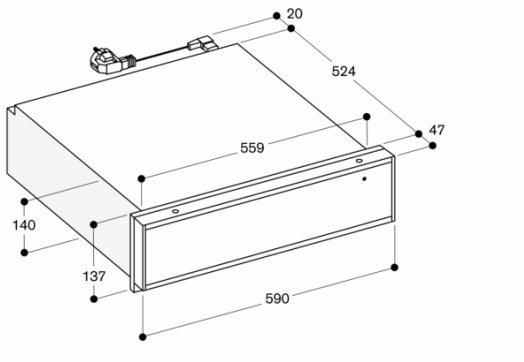

Measurements in mm

Side view of WS 461 below BS, BM, CM

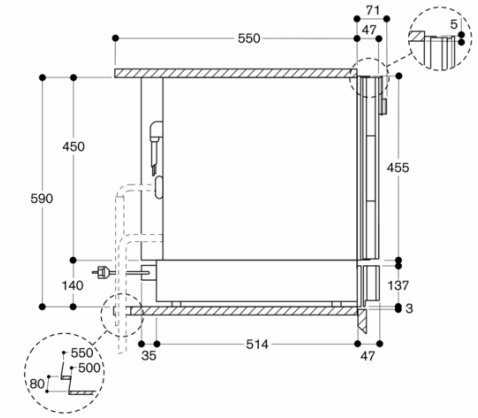

Measurements in mm