Series 8, Electric Hob, 90 cm, Black, PKM975DK1D

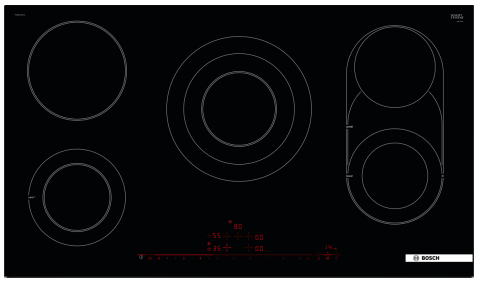

HEZ32WA00	Wireless food thermometer
HEZ390011	Stainless Steel roaster with glas lid
HEZ390090	Wok Set consisting of 3 Items
HEZ390220	System pan diameter 19 cm
HEZ390512	Teppan Yaki (large)
HEZ390522	Griddle Plate
HEZ392900	Intermediate bottom
HEZ394301	Connecting strip
HEZ9FE280	Iron pan Ø 18 / 28 cm
HEZ9SE030	Set of 2 pots and 1 pan

The glass-ceramic radiant hob: makes cooking and cleaning especially easy.

- **DirectSelect Premium**: Direct, simple selection of the desired cooking zone, power and additional functions.
- **PerfectFry**: For perfect browning of roasted foods thanks to sensor control with 5 power levels.
- **PowerBoost**: selectable boost in power output for a 20% shorter time to boiling.
- **ReStart**: if something boils over, the cooktop automatically turns itself off and saves the last selected setting.
- **ChildLock**: locks the control panel to prevent accidental changes in settings.

Product name/family: ..... Cooking zone ceramic
Built-in / Free-standing: ..... Built-in
Energy input: .....Electric
Total number of positions that can be used at the same time: 5
Min. required niche size for installation (HxWxD): .....44 x 880-880 x 500-500 mm
Width of the appliance: .....916 mm
Dimensions: ..... 44x916x527 mm
Dimensions of the packed product (HxWxD): ... 100 x 1130 x 620 mm
Net weight: .....14.2 kg
Gross weight: ..... 14.8 kg
Residual heat indicator: .....yes
Location of control panel: ..... Front
Basic surface material: .....Ceramic
Color of surface: .....Black, Alu, brushed
EAN code: 4242002929040
Voltage: .....220-240 V
Frequency: ..... 60; 50 Hz

4 242002 929040

Series 8, Electric Hob, 90 cm, Black, PKM975DK1D

The glass-ceramic radiant hob: makes cooking and cleaning especially easy.

Design:
- Facette front and rear, side profiles

Comfort and Safety:
- 5 HighSpeed cooking zones, including:
- 1 dual zone
- 1 triple zone
- 1 CombiZone
- Variable 17-stage power settings for each zone
- Electronic power level display
- Timer with automatic shut off for all zones
- Buzzer
- count-up timer, per cooktop
- Keep warm function
- Freeze function
- Restart fuction

Environment+safety:
- Main switch
- Power on indicator light
- 2 stage Hh residual heat indicator for each zone
- Individual tunable energy consumption display

Professional equipment:

Quickness:
- PowerBoost function

Measurements
- Appliance dimensions: (W/D) 916 mm x 527 mm
- Installation dimensions: (ID/W/D) 44 mm x 880 mm x 500 mm
- Min. worktop thickness: 16 mm
- Total connected load: 10700 W

Series 8, Electric Hob, 90 cm, Black, PKM975DK1D

measurements in mm

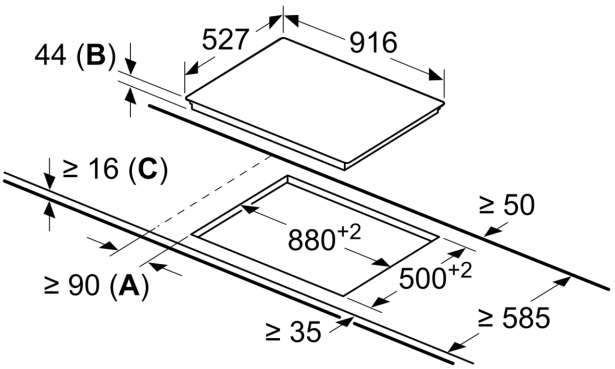

A: Minimum distance from the hob cut-out to the wall.
B: Recessed depth
C: With fitted oven underneath min. 20, possibly more; see space requirements for the oven.