Series 4, Induction Hob, 60 cm, Black, surface mount without frame PIE611BB1E

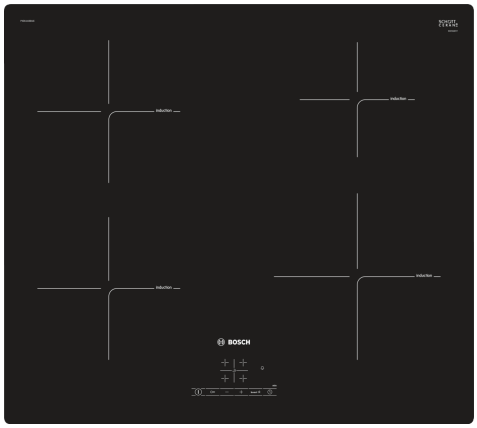

HEZ390090	Wok Set consisting of 3 Items
HEZ9ES100	Espresso maker 4 cups
HEZ9FE280	Iron pan Ø 18 / 28 cm
HEZ9SE030	Set of 2 pots and 1 pan
HEZ9SE040	4 pieces Set
HEZ9SE060	6 pieces Set

The induction hob: cook fast, clean and safely while using very little energy.

- **TouchSelect**: Selection of the desired cooking zone and easy setting of the desired power level.
- **PowerBoost**: Up to 50% more power for faster heating.
- **Ceramics glass is much more slim and durable with better vertical conduction.**

Product name/family:	Cooking zone ceramic
Built-in / Free-standing:	Built-in
Energy input:	Electric
Total number of positions that can be used at the same time:	4
Min. required niche size for installation (HxWxD):	51 x 560-560 x 490-500 mm
Width of the appliance:	592 mm
Dimensions:	51 x 592 x 522 mm
Dimensions of the packed product (HxWxD):	126 x 753 x 603 mm
Net weight:	11.2 kg
Gross weight:	13.5 kg
Residual heat indicator:	yes
Location of control panel:	Front
Basic surface material:	Ceramic
Color of surface:	Black
Length electrical supply cord:	110.0 cm
EAN code:	4242002861586
Voltage:	220-240 V
Frequency:	50; 60 Hz

4 242002 861586

Series 4, Induction Hob, 60 cm, Black, surface mount without frame PIE611BB1E

The induction hob: cook fast, clean and safely while using very little energy.

Design:

Comfort and Safety:

- 4 induction zone hob
- TouchControl +/- (EasyTouch)
- Electronic power level display
- Timer with automatic shut off for all zones
- Buzzer
- Automatic pan recognition
- Power management function
- Automatic safety switch-off
- Safety lock
- Connected load: 7.4 KW
- loose insert in packaging

Power and size:

- Variable 17-stage power settings for each zone
- Min. worktop thickness: 16 mm

Environment+safety:

- 2 stage Hh residual heat indicator for each zone
- Main switch

Quickness:

- Boost setting for all zones
- Cooking zones: 1 x Ø 180 mm, 1.8 KW (max. Power levels 3.1 KW) Induction; 1 x Ø 180 mm, 1.8 KW (max. Power levels 3.1 KW) Induction; 1 x Ø 145 mm, 1.4 KW (max. Power levels 2.2 KW) Induction;1 x Ø 210 mm, 2.2 KW (max. Power levels 3.7 KW) Induction

Series 4, Induction Hob, 60 cm,
Black, surface mount without frame
PIE611BB1E

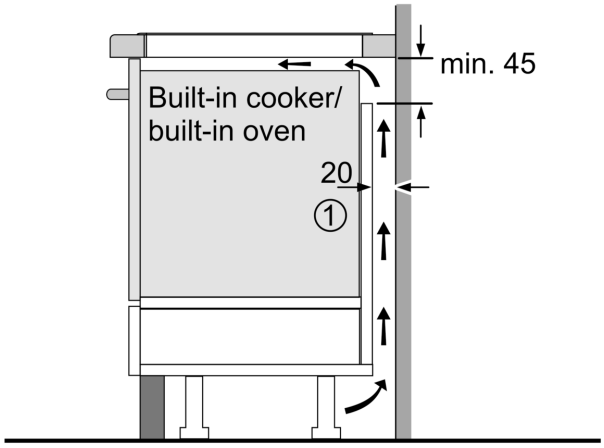

①
Ventilation gap must
be present

All measurements in mm

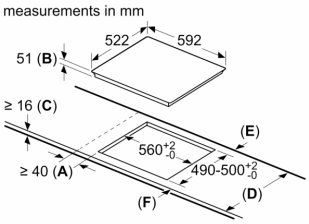

A: Minimum distance from the hob cut-out to the wall.
B: Recessed depth
C: The clearance between the surface of the worktop and the top of the front of the oven must be 30 mm. See space requirements for the oven.

The worktop into which the hob is installed must withstand loads of approx. 60 kg; suitable substructures must be used if required.

D	E	F
585-600	50	≥ 35
> 600	≥ 50	≥ 50

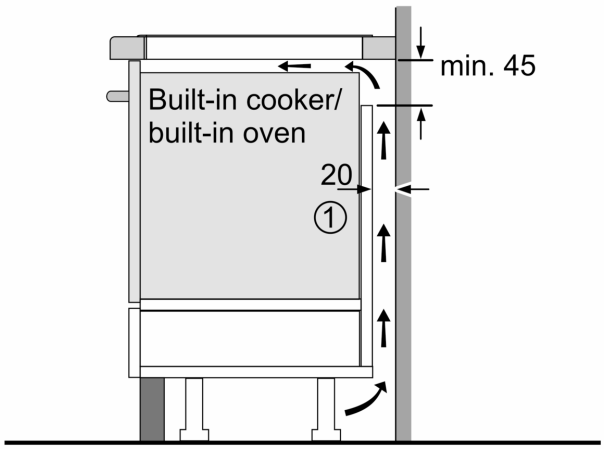

①
Ventilation gap must
be present

All measurements in mm

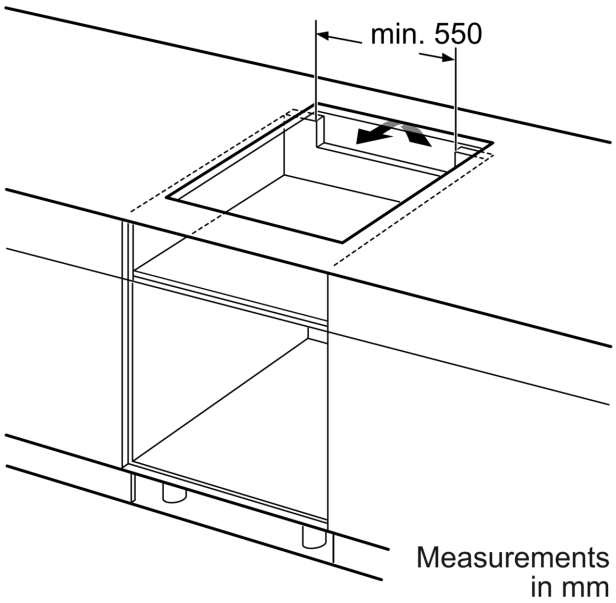

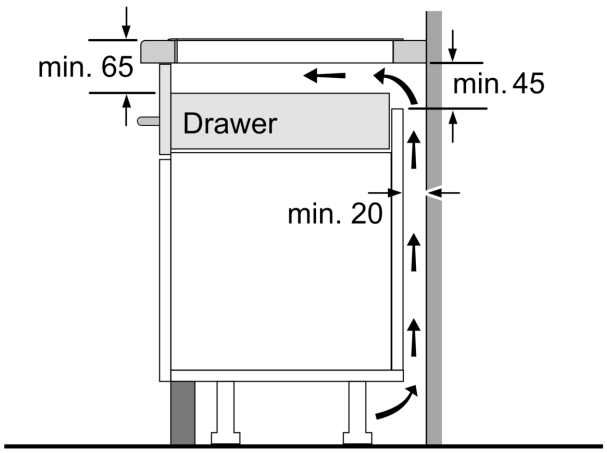

Measurements in mm