SIEMENS

iQ300, Canopy Extractor, 53 cm, Silver metallic
LB55565

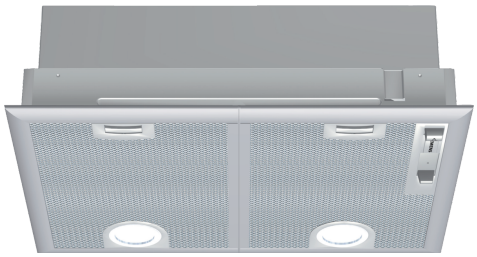

C

LZ73050	Standard odor filter
LZ74020	Installation kit for canopy

The powerful canopy cooker hood is concealed above the cooktop.

✓ LED light: For optimal visibility and atmosphere when cooking.

Typology: ..... Built-in/Built-under
Length electrical supply cord: ..... 130.0 cm
Min. required niche size for installation (HxWxD): ..... 255mm x 500.0mm x 350mm mm
Minimum distance above an electric hob: ..... 650 mm
Minimum distance above a gas hob: ..... 650 mm
Net weight: ..... 7.3 kg
Type of control: ..... mechanical
Number of speed settings: ..... 3-stages + intensive setting
Max. air extraction: ..... 363 m³/h
Boost position output recirculating: ..... 395.0 m³/h
Max. recirculation: ..... 268 m³/h
Boost position air extraction: ..... 618 m³/h
Maximum Air flow: ..... 363 m³/h
Number of lights: 2
Noise level: ..... 56 dB(A) re 1pW
Diameter of air outlet: ..... 120 / 150 mm
Grease filter material: ..... Washable aluminium
EAN code: 4242003838389
Connection rating: ..... 206 W
Fuse protection: ..... 10 A
Voltage: ..... 220-240 V
Frequency: ..... 50 Hz
Plug type: ..... Gardy plug w/ earthing
Installation typology: ..... Built-in

4 242003 838389

iQ300, Canopy Extractor, 53 cm,
Silver metallic
LB55565

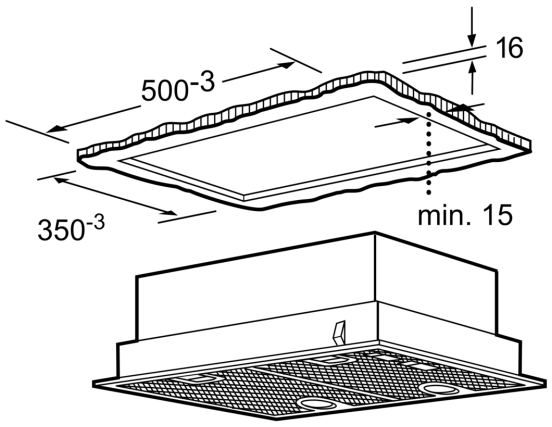

measurements in mm

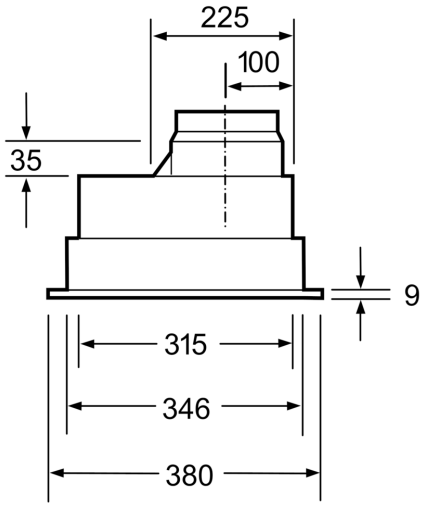

measurements in mm

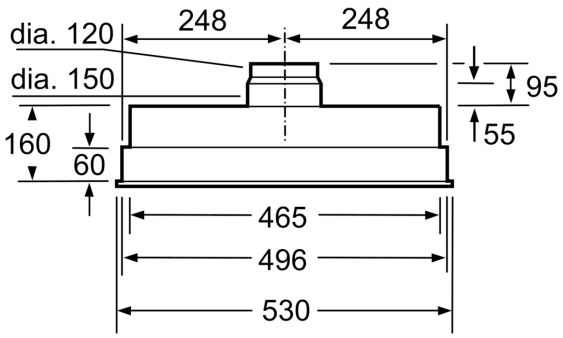

measurements in mm

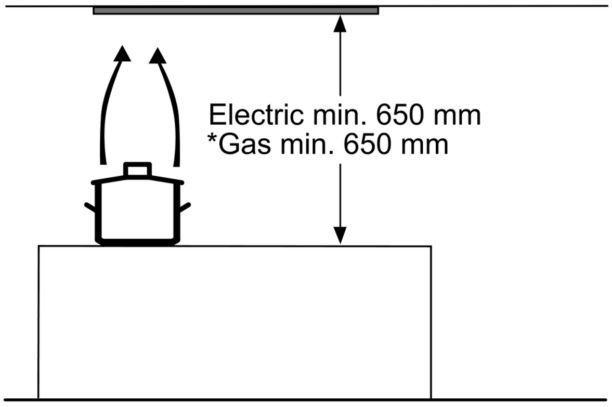

* from upper edge of pan support

measurements in mm