SIEMENS

iQ500, Dual fuel range cooker, Stainless steel
HQ737357Z

B

The professional range cooker with electric oven and gas cooktop.

Design: ..... Free-standing
Dimensions: ..... 846-880x898x600 mm
Length electrical supply cord: ..... 120.0 cm
Net weight: ..... 71.9 kg
Gross weight: ..... 81.3 kg
EAN code: 4242003751985
Number of cavities (2010/30/EC): 1
Usable volume (of cavity) - NEW (2010/30/EC): ..... 112 l
Energy efficiency: ..... B
Energy consumption per cycle conventional (2010/30/EC): ..... 1.16 kWh/cycle
Energy consumption per cycle forced air convection (2010/30/EC): 1.35 kWh/cycle
Connection rating: ..... 3200 W
Fuse protection: ..... 16 A
Voltage: ..... 220-240 V
Frequency: ..... 60; 50 Hz
Plug type: ..... No plug (electrical connection by electrician)

4 242003 751985

SIEMENS

iQ500, Dual fuel range cooker, Stainless steel
HQ737357Z

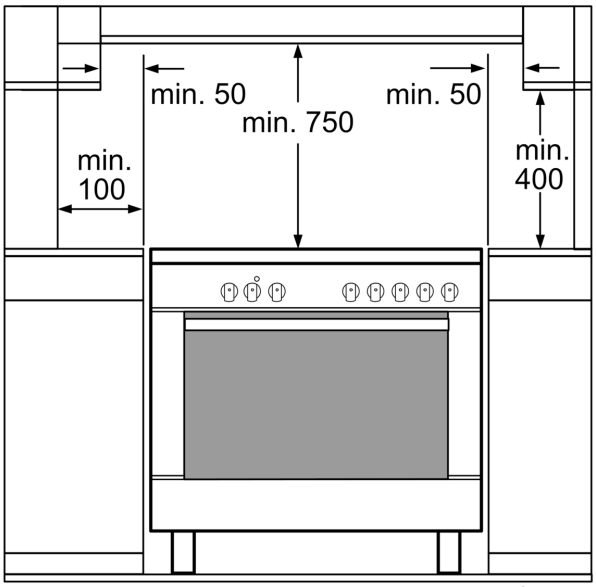

measurements in mm

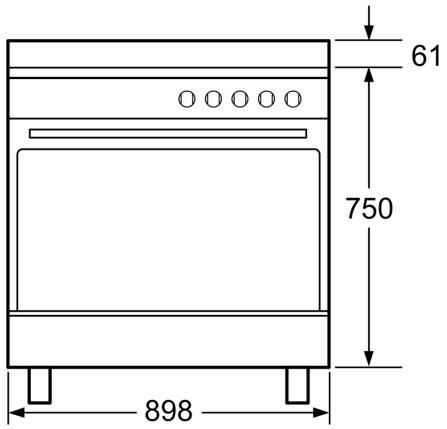

measurements in mm

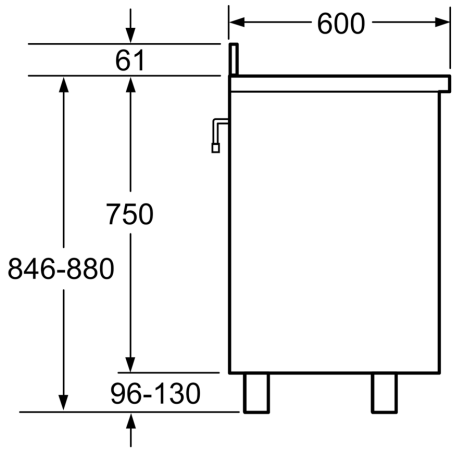

measurements in mm

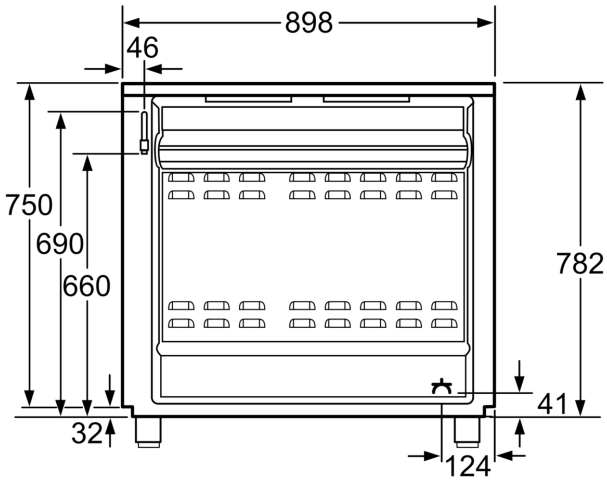

measurements in mm