SIEMENS

iQ300, Electric Domino Hob, 30 cm, Black, ET375FFP1E

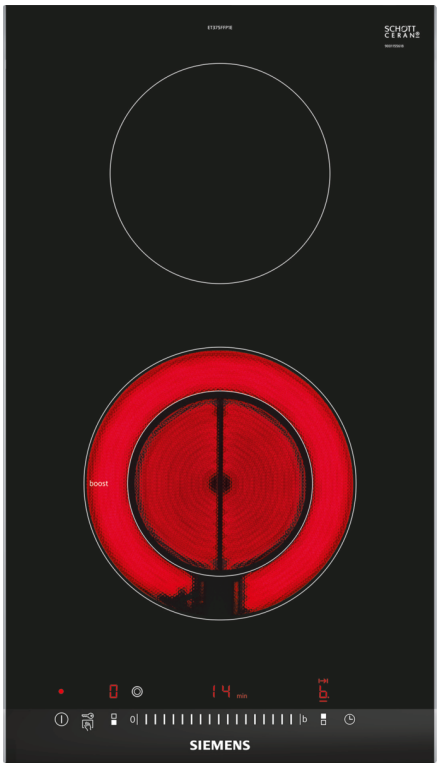

HZ32WA00	Wireless food thermometer
HZ390090	Wok Set consisting of 3 Items
HZ394301	Connecting strip

The modern Domino glass ceramic cooktop for more cooking pleasure and less cleaning effort.

- ✓ The 30 cm wide cooktop is ideal for combining with other Domino or faceted design cooktops.
- ✓ touchSlider control allows to control the temperature by entering it directly or by moving the slider with a single finger.
- ✓ The timer with switch-off function safely shuts off the cooking zone when the selected cooking time expires.

Product name/family: ..... Vario/Domino cooking zone cera
Product name/family: ..... Vario/Domino cooking zone cera
Design: ..... Built-in
Design: ..... Built-in
Type of heating: .....Electric hob
Type of heating: .....Electric hob
Total number of positions that can be used at the same time: 2
Total number of positions that can be used at the same time: 2
Min. required niche size for installation (HxWxD): .....38 x x mm
Min. required niche size for installation (HxWxD): .....38 x x mm
Width of the appliance: ..... 302 mm
Width of the appliance: ..... 302 mm
Dimensions: ..... 38x302x520 mm
Dimensions: ..... 38x302x520 mm
Dimensions of the packed product (HxWxD): ... 120 x 375 x 590 mm
Dimensions of the packed product (HxWxD): ... 120 x 375 x 590 mm
Net weight: ..... 4.8 kg
Net weight: ..... 4.8 kg
Gross weight: ..... 5.5 kg
Gross weight: ..... 5.5 kg
Residual heat indicator: .....yes
Residual heat indicator: .....yes
Location of control panel: ..... Front
Location of control panel: ..... Front
Basic surface material: ..... Ceramic
Basic surface material: ..... Ceramic
Color of surface: ..... Black, Alu, brushed
Color of surface: ..... Black, Alu, brushed
Length electrical supply cord: ..... 100.0 cm
Length electrical supply cord: ..... 100.0 cm
EAN code: 4242003755075
EAN code: 4242003755075
Fuse protection: .....16 A
Fuse protection: .....16 A
Voltage: .....220-240 V
Voltage: .....220-240 V
Frequency: .....60; 50 Hz
Frequency: .....60; 50 Hz

4 242003 755075

SIEMENS

iQ300, Electric Domino Hob, 30 cm, Black, ET375FFP1E

Measurements in mm

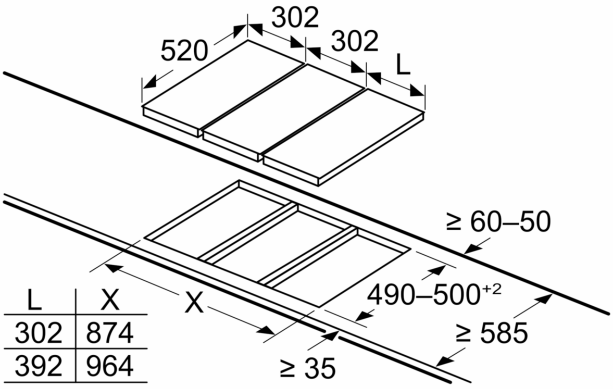

L	X
302	874
392	964

If two or more elements are installed right next to one another, one or several installation kits are required (2 elements 1 installation kit, 3 elements 2 installation kits, etc.)

measurements in mm

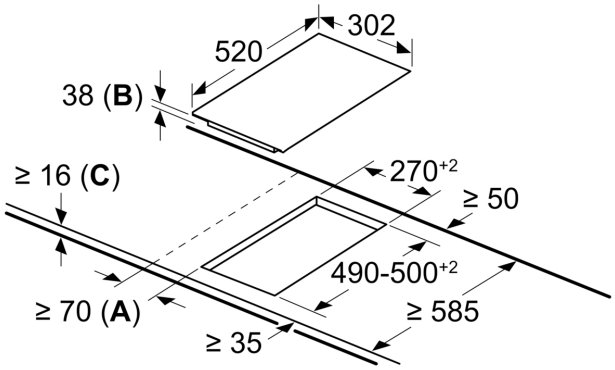

A: Minimum distance from the hob cut-out to the wall.
B: Recessed depth
C: With fitted oven underneath min. 20, possibly more; see space requirements for the oven.

Measurements in mm

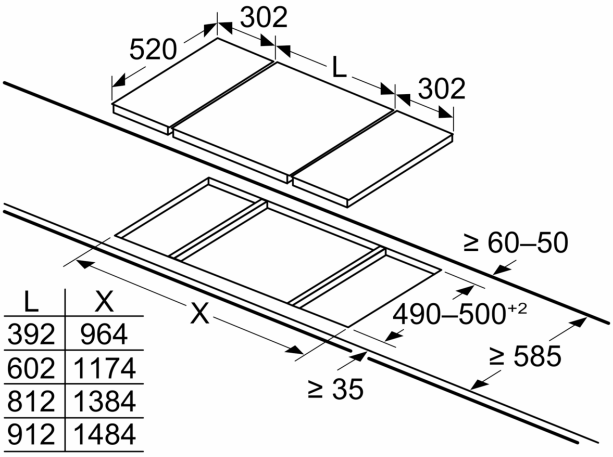

L	X
392	964
602	1174
812	1384
912	1484

When installing two Domino units right next to a hob, two assembly kits (HZ394301) are required

measurements in mm

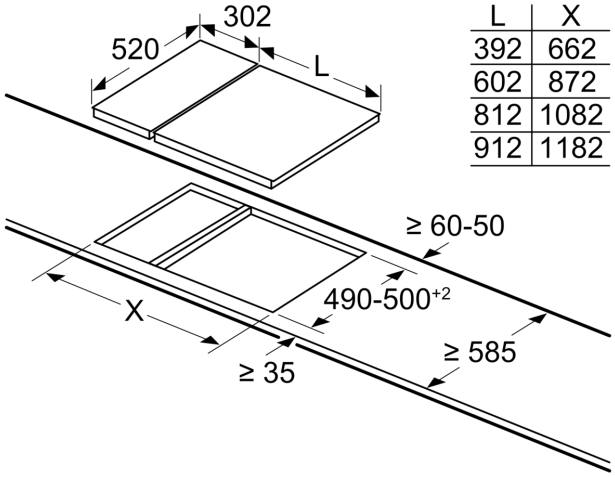

L	X
392	662
602	872
812	1082
912	1182

When installing a Domino unit right next to a hob, an assembly kit (HZ394301) is required.

SIEMENS

Measurements in mm
Assembly kit (HZ394301) for Domino

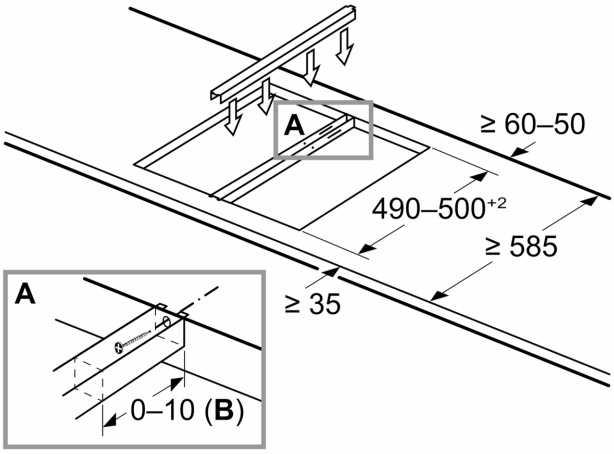

B: Dependent on the cut-out depth

Measurements in mm
Picture for the table Domino combination possibilities with corresponding devices and cutout dimensions

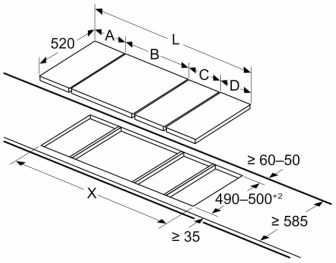

If two or more elements are installed right next to one another, one or several installation kits are required (2 elements 1 installation kit, 3 elements 2 installation kits, etc.)

Cutout dimension (X) depending on the combination (see combination table)

measurements in mm
Domino combination options with corresponding appliance and cut-out dimensions

Width category:	30	40	60	70	80	90
Appliance width:	302	392	602	710	812	912

	A	B	C	D	L	X
2x30	302	302	-	-	604	**572**
1x30, 1x40	302	392	-	-	694	**662**
1x30, 1x60	302	602	-	-	904	**872**
1x30, 1x70*	302	710	-	-	1012	**980**
1x30, 1x80	302	812	-	-	1114	**1082**
1x30, 1x90	302	912	-	-	1214	**1182**
2x40	392	392	-	-	784	**752**
1x40, 1x60	392	602	-	-	994	**962**
1x40, 1x70*	392	710	-	-	1102	**1070**
1x40, 1x80	392	812	-	-	1204	**1172**
1x40, 1x90	392	912	-	-	1304	**1272**
3x30	302	302	302	-	906	**874**
2x30, 1x40	302	302	392	-	996	**964**
2x30, 1x60	302	302	602	-	1206	**1174**
2x30, 1x70*	302	302	710	-	1314	**1282**
2x30, 1x80	302	302	812	-	1416	**1384**
2x30, 1x90	302	302	912	-	1516	**1484**
1x30, 2x40	302	392	392	-	1086	**1054**
1x30, 1x40, 1x60	302	392	602	-	1296	**1264**
1x30, 1x40, 1x70*	302	392	710	-	1404	**1372**
1x30, 1x40, 1x80	302	392	812	-	1506	**1474**
1x30, 1x40, 1x90	302	392	912	-	1606	**1574**
3x40	392	392	392	-	1176	**1144**
2x40, 1x60	392	392	602	-	1386	**1354**
4x30	302	302	302	302	1208	**1176**
3x30, 1x40	302	302	302	392	1298	**1266**
2x30, 2x40	302	302	392	392	1388	**1356**
1x30, 3x40	302	392	392	392	1478	**1446**
1x30, 1x75	302	750	-	-	1052	**1016**
1x40, 1x75	392	750	-	-	1142	**1106**
2x30, 1x75	302	302	750	-	1354	**1318**
1x30, 1x40, 1x75	302	392	750	-	1444	**1408**

* Not possible with 70 cm induction hob