# Accessory for cooling
# CI24Z590

Dimensions of the packed product (HxWxD): . 110 x 840 x 2170 mm
Pallet dimensions: .....80.0 x 80.0 x 120.0
Standard number of units per pallet: ..... 6
Net weight: ..... 6.6 kg
Gross weight: ..... 16.6 kg
EAN code: .....4242003402948

4 242003 402948

SIEMENS
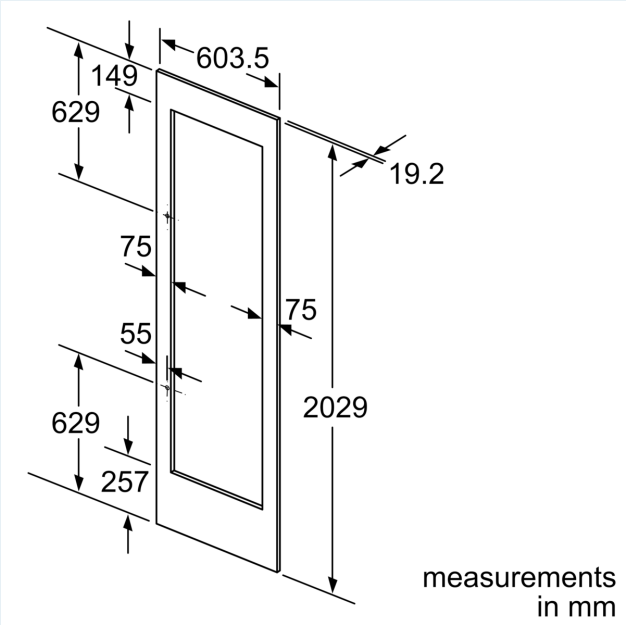
## Accessory for cooling
## CI24Z590