Series 4, Built-in oven, 90 x 48 cm, Stainless steel
VBC514CR0

The built-in oven with hotair, 90 cm width: achieve perfect baking and roasting results for big roasts or dishes of large quantities

- **Hotair**: perfect results on two levels thanks to optimal distribution of heat.
- **LED display control, red**: easy-to-use thanks to the time functions.
- **Touch Control with SteelTouch™ Buttons Makes Operating the Oven Easier.**

Gross weight: ..... 55.0 kg
Built-in / Free-standing: ..... Built-in
Integrated Cleaning system: .....Hydrolytic
Min. required niche size for installation (HxWxD): 477-480 x 860-864 x 560 mm
Dimensions: ..... 475x896x577 mm
Dimensions of the packed product (HxWxD): ..... 590 x 960 x 680 mm
Control Panel Material: .....brushed stainless steel
Door Material: ..... Glass
Net weight: .....46.7 kg
Usable volume of cavity: ..... 85 l
Heating modes:: ..... Full width grill, Rotisserie, Hot Air Standard, Conventional heat, Conventional heat gentle, Bottom heat, Hot air grilling, Circulating air
First cavity material: ..... Other
Number of interior lights: 2
Length electrical supply cord: .....115.0 cm
Interior Lights - cavity 1: 2
Pull-out system: ..... Accessory
Included accessories: .....1 x combination grid, 1 x universal pan
Broil Element Wattages cavity 1: .....2900 W
Convection Element Wattages cavity 1: .....2860 W
Energy efficiency class: .....B
Energy consumption per cycle conventional (2010/30/EC): .....1.04 kWh/cycle
Energy consumption per cycle forced air convection (2010/30/EC): .....09 kWh/cycle
Energy efficiency index (2010/30/EC): .....114.3 %
Connection rating: ..... 3100 W
Fuse protection: .....16 A
Voltage: ..... 220-240 V
Frequency: ..... 50; 60 Hz
Plug type: .....No plug (electrical connection by electrician)
Energy input: .....Electric
Required cutout/niche size for installation (in): x
Dimensions of the packed product: ..... 23.22 x 37.79 x 26.77
Net weight: .....103.000 lbs
Gross weight: ..... 121.000 lbs
Length electrical supply cord: .....115.0 cm
Net weight: .....46.7 kg

---

4 242005 034673

Series 4, Built-in oven, 90 x 48 cm, Stainless steel
VBC514CR0

The built-in oven with hotair, 90 cm width: achieve perfect baking and roasting results for big roasts or dishes of large quantities

- Cavity volume: 85 l

Hook-in racks / rails

- Telescopic shelf rails as optional accessory

Design:

- Extra large capacity oven with grey enamel

Cleaning:

- Full glass inner door

Comfort:

- Electronic clock
- Bottom, Oven door with SoftClose, Soft opening
- Rapid heating-up
- Interior lighting
- Integral cooling fan

Accessory:

- 1 x combination grid, 1 x universal pan
- Child lock
- Automatic switch off
- Start-/Stop button
- Door contact switch
- Length of mains cable: 115 cm
- Nominal voltage: 220 - 240 V
- Total connected load electric: 3.1 KW
- Cavity volume: 85 l

Dimensions:

- Appliance dimension (H x W x D): 475 mm x 896 mm x 554 mm
- Niche dimension (hxwxd): 560 mm - 568 mm x 450 mm - 455 mm x 550 mm
- “Please reference the built-in dimensions provided in the installation drawing”
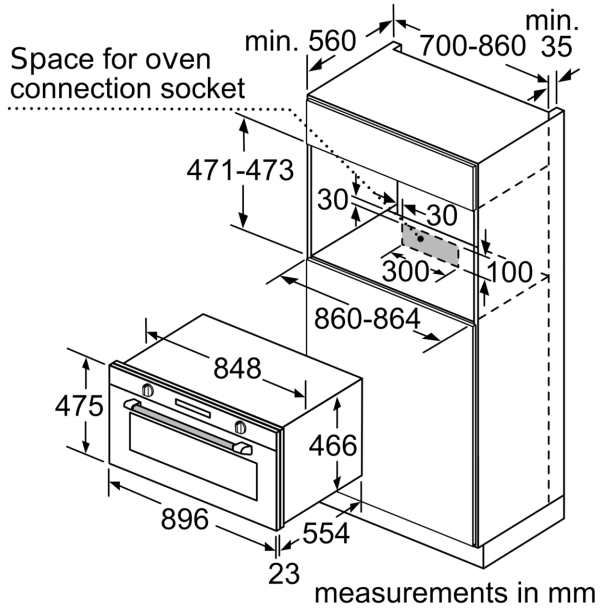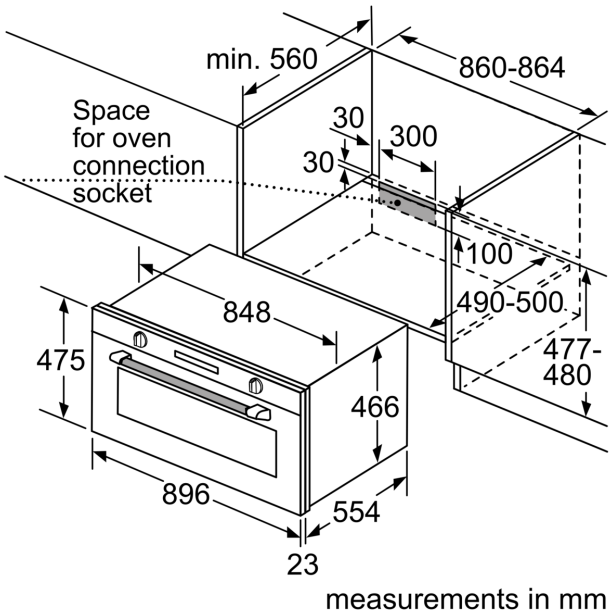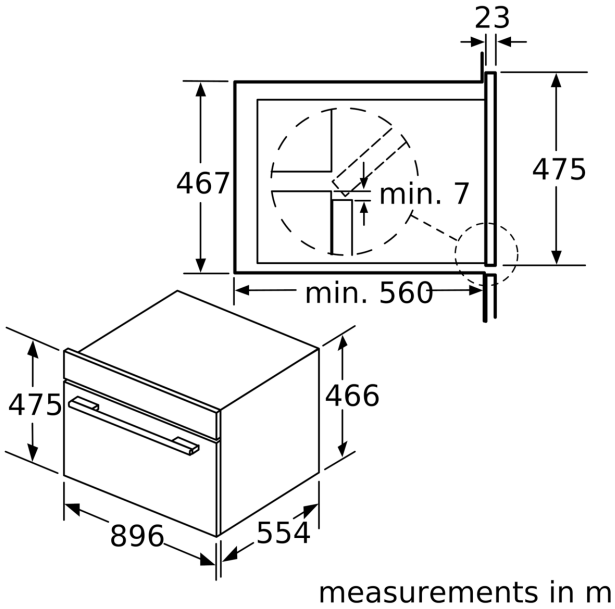
Series 4, Built-in oven, 90 x 48 cm, Stainless steel
VBC514CR0