Series 8, Built-in oven, 60 x 60 cm, Black
HBG655NB1

1 x enamel baking tray, 1 x combination grid, 1 x universal pan

HEZ327000 Pizza stone, HEZ530000 Half tray, HEZ531010 Baking tray, non-stick ceramic coated, HEZ532010 Universal pan, non-stick ceramic coated, HEZ617000 Pizza pan, enamelled, HEZ625071 Grill tray, anthracite, HEZ631070 Baking tray, enamelled, HEZ632070 Multipurpose pan, enamelled, HEZ633001 Lid for professional pan, enamelled, HEZ633070 Professional pan with grid, enamelled, HEZ634000 Baking and roasting grid, HEZ635000 Barbecue-Set, HEZ636000 Glass pan, HEZ638200 2 level telescopic shelf rails, full ext, HEZ638300 3 level telescopic rails, full ext, HEZ660050 Cover Strip, HEZ664000 Baking and roasting grid, steam, HEZ915003 Glass roasting dish, 5,4 L, HEZG0AS00 Connecting cable 3m

- **4D Hot Air**: even heat distribution for perfect results – on any level.
- **AutoPilot 10**: every dish is a perfect success thanks to 10 pre-set automatic programmes.
- **TFT Touch Display**: easy-to-use thanks to the Control Ring with clear text and symbols.
- **EcoClean Direct**: almost no cleaning is necessary thanks to a special coating of the rear and side wall and the roof that automatically absorbs grime and regeneration program.
- **Flap door with SoftOpen and SoftClose**: the oven door opens and closes especially gently and quietly.

Gross weight: ..... 38.7 kg
Built-in / Free-standing: ..... Built-in
Integrated Cleaning system: ..... EcoClean Direct program, Hydrolytic
Min. required niche size for installation (HxWxD): 585-595 x 560-568 x 550 mm
Dimensions: ..... 595x594x548 mm
Dimensions of the packed product (HxWxD): ..... 670 x 670 x 680 mm
Control Panel Material: ..... Glass
Door Material: ..... Glass
Net weight: ..... 36.3 kg
Usable volume of cavity: ..... 71 l
Heating modes:: 4D hotair, Defrost, Full width grill, Hot Air-Eco, Half width grill, Conventional heat, Conventional heat ECO, Pizza setting, low temperature cooking, Bottom heat, Hot air grilling, pre-heating, warming
Number of interior lights: 1
Length electrical supply cord: ..... 120.0 cm
Interior Lights - cavity 1: 1
Pull-out system: 1-level
Included accessories: 1 x enamel baking tray, 1 x combination grid, 1 x universal pan
Broil Element Wattages cavity 1: ..... 2800 W
Convection Element Wattages cavity 1: ..... 2200 W
Energy efficiency class: ..... A+
Energy consumption per cycle conventional (2010/30/EC): ..... 0.87 kWh/cycle
Energy consumption per cycle forced air convection (2010/30/EC): 0.69 kWh/cycle
Energy efficiency index (2010/30/EC): ..... 81.2 %
Connection rating: ..... 3600 W
Fuse protection: ..... 16 A
Voltage: ..... 220-240 V
Frequency: ..... 60; 50 Hz
Plug type: ..... Gardy plug w/ earthing
Alternative colors available: HBG655NS1, HBG655NW1
Energy input: ..... Electric
Required cutout/niche size for installation (in): x
Dimensions of the packed product: ..... 26.37 x 26.37 x 26.77
Net weight: ..... 80.000 lbs
Gross weight: ..... 85.000 lbs
Length electrical supply cord: ..... 120.0 cm
Net weight: ..... 36.3 kg

4 242002 807843

Series 8, Built-in oven, 60 x 60 cm, Black
HBG655NB1

Type of oven / heating system:

- Bottom, Oven door with SoftClose, Soft opening
- Oven with 13heating methods:
- 4D hot air, Hotair Eco,, Conventional heat, Conventional heat ECO, Hot air grilling, Full width grill, Half width grill, Pizza setting, Bottom heat, Low temperature cooking, Defrost, Preheating, Hold warm
- Cavity volume: 71 l
- Temperature range 30 °C - 300 °C
- cookControl, 10

Design:

- Bar handle
- Rotary swivel

Cleaning:

- Ecolyse features: back panel, ceiling, side liners
- EcoClean

Comfort:

- Temperature proposal
- Actual temperature display heating-up control Sabbath setting
- Supporting systems: Programs
- Electronic clock
- Rapid heating-up
- Interior lighting
- Integral cooling fan
- 1 level telescopic shelf, 3 level telescopic shelf rails full extension, with Stop function

Hook-in racks / rails

- Number of shelf levels: 5 PC

Accessory:

- 1 x universal pan, 1 x combination grid, 1 x enamel baking tray

Environment and Safety:

- Child lock
- Automatic switch off Start-/Stop button Door contact switch
- Maximum window temperature 40° C

Technical Info:

- Length of mains cable: 120 cm
- Total connected load electric: 3.6 KW
- Appliance dimension (H x W x D): 595 mm x 594 mm x 548 mm
- Niche dimension (hxwxd): 560 mm - 568 mm x 450 mm - 455 mm x 550 mm
- “Please reference the built-in dimensions provided in the installation drawing”

Series 8, Built-in oven, 60 x 60 cm, Black
HBG655NB1

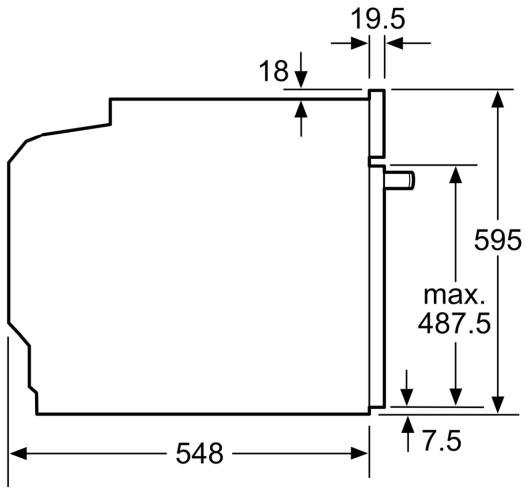

measurements in mm

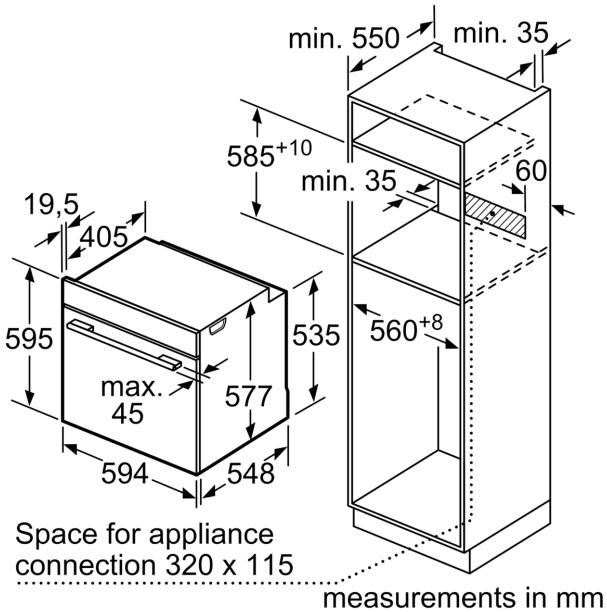

measurements in mm

If the appliance will be installed underneath a hob, the following worktop thicknesses (including substructure if necessary) must be taken into account.

Hob type	min. worktop thickness	
	fitted	flush
Induction hob	37 mm	38 mm
Full surface Induction hob	47 mm	48 mm
Gas hob	30 mm	38 mm
Electric hob	27 mm	30 mm

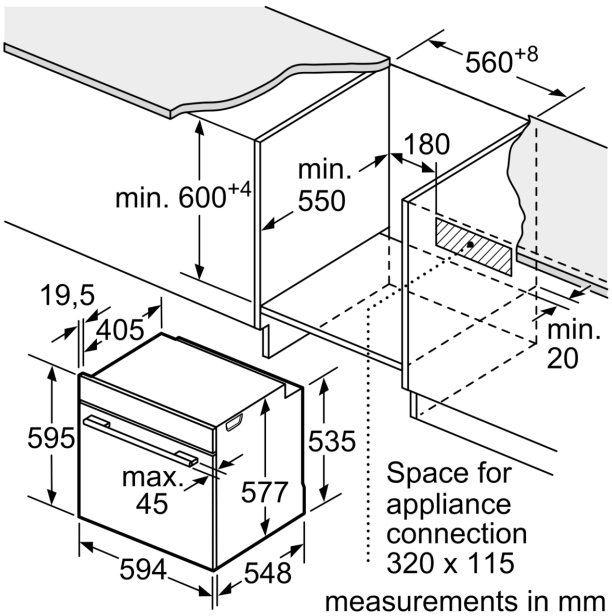

measurements in mm