24" Single Wall Oven

500 Series – Stainless Steel HBE5452UC

BOSCH
Invented for life



HBE5452UC
Stainless Steel

The 24" Bosch Wall Oven with Wi-Fi Connectivity features Genuine European Convection and is designed for kitchens with a smaller footprint.

Features & Benefits

- Genuine European Convection for even baking results on multiple racks.
- Unique ring control design with TFT display.
- The wall oven is designed to be installed flush with your cabinetry.
- EcoClean® system uses cavity coating and heat to burn off most grease.
- Download Bosch Home Connect™ application and control wall oven with your smart phone or tablet.

General Properties	
Home Connect™ (WiFi enabled)	Yes
Cooking modes	Convection Multi-Rack, Bake, Pizza, Roast, Proof, Convection Broil, Broil, Slow Cooking, Defrost, Plate Warming, Warming
Cleaning type	EcoClean® Coating
Illumination type	Halogen
Interior lights	1
Oven Performance	
Bake / broil element wattages	1,420 / 3,050 W
Convection element wattages	2,300 W
Technical Details	
Watts (W)	3,840 W
Circuit breaker (A)	20 A
Volts (V)	240 / 208 V
Frequency (Hz)	60 Hz
Power cord length (in)	60"
Plug type	Fixed Connection, No Plug
Energy source	Electric

Dimensions & Weight	
Overall appliance dimensions (HxWxD) (in)	23 7/16" x 23 7/16" x 22 13/16"
Required cutout size – Standard (HxWxD) (in)	23 1/16" x 22 1/8" x 23 1/2
Required cutout size – Flush (HxWxD) (in)	23 5/8" x 23 3/4" x 23 5/8"
Oven cavity size (cu. ft.)	2.5
Overall oven interior dimensions (HxWxD) (in)	14 1/2" x 18 7/8" x 17 3/8"
Usable oven interior dimensions (HxWxD) (in)	11 1/2" x 15 1/2" x 15 5/8"
Net weight (lbs)	83 lbs
Accessories–Included	
Included	3 Standard Oven Racks

Accessories: To purchase Bosch accessories, cleaners & parts please visit www.bosch-home.com/us/store or call 1-800-944-2904 (Mon to Fri 5 am to 6 pm PST, Sat 6 am to 3 pm PST).

Notes: All height, width and depth dimensions are shown in inches. BSH reserves the absolute and unrestricted right to change product materials and specifications, at any time, without notice. Consult the product's installation instructions for final dimensional data and other details prior to making cutout.

Warranties: Please see Use & Care manual or Bosch website for statement of limited warranty.

For more information on our entire line of products, go to www.bosch-home.com/us or call 1-800-944-2904

© BSH Home Appliances Corporation. All rights reserved. Bosch is a registered trademark of Robert Bosch GmbH.

24" Single Wall Oven

500 Series – Stainless Steel HBE5452UC

BOSCH
Invented for life

Installation Details

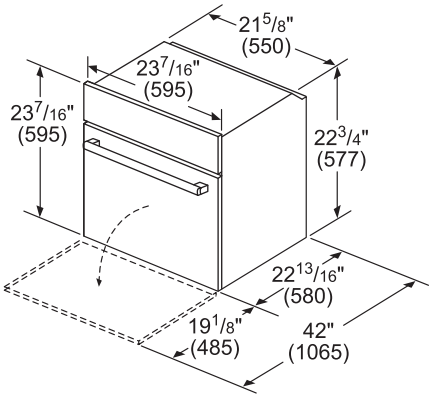

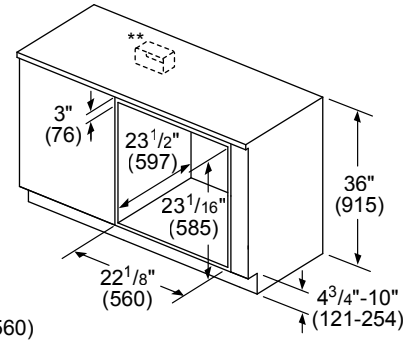

** For single ovens installed under a countertop, the junction box may be located to the left, or the right of the unit within reach of the power conduit.

HBE5452UC is approved to be installed under gas cooktop only. For installation with cooktop, reference cooktop installation drawing.

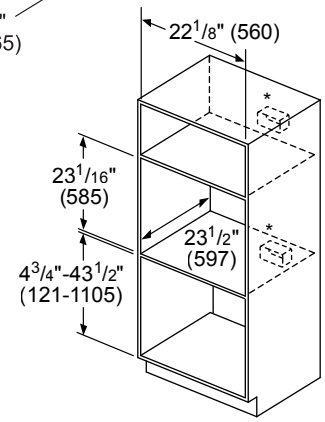

* For wall installations, the junction box may be located above or below the unit within reach of the power conduit.

Measurements in inches (mm)

Flush Install

Top View

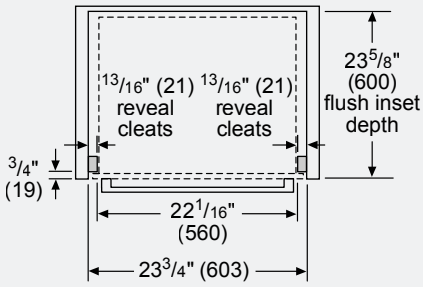

Side View

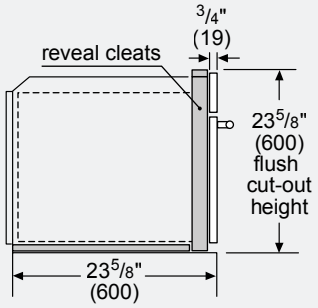

Example Flush Install



Measurements in inches (mm)

Accessories: To purchase Bosch accessories, cleaners & parts please visit www.bosch-home.com/us/store or call 1-800-944-2904 (Mon to Fri 5 am to 6 pm PST, Sat 6 am to 3 pm PST).

Notes: All height, width and depth dimensions are shown in inches. BSH reserves the absolute and unrestricted right to change product materials and specifications, at any time, without notice. Consult the product's installation instructions for final dimensional data and other details prior to making cutout.

Warranties: Please see Use & Care manual or Bosch website for statement of limited warranty.

For more information on our entire line of products, go to www.bosch-home.com/us or call 1-800-944-2904

© BSH Home Appliances Corporation. All rights reserved. Bosch is a registered trademark of Robert Bosch GmbH.