Series 8, Front Load Washing Machine, 8 kg, 1400 rpm WAW28440SG

VarioDrum | EcoSilence Drive | ActiveWater Plus

WMZ2200	Floor securing component
WMZ2381	Extension for cold water inlet /Aquastop
WMZPW20W	Platform with pull-out, washer, cubic

The washing machine with new design and EcoSilence Drive™: enjoy supremely quiet operation and excellent durability.

- **Vario Drum**: gently and efficiently wash with even water distribution and without creasing garments.
- **AllergyPlus programme**: specially developed for the needs of allergy sufferers.
- **SpeedPerfect reduces the wash cycle time by upto 20% without compromising on wash quality**
- **Eco Silence Drive™: the efficient and highly durable washing machine drive.**
- **Active Water Plus: For highly efficient use of water even with smaller loads thanks to automatic load detection.**

Built-in / Free-standing:	Free-standing
Door hinge:	Left
Color / Material body:	White
Length electrical supply cord:	160.0 cm
Height of the appliance:	848 mm
Dimensions of the product:	848x598x590 mm
Wheels:	No
Net weight:	72.5 kg
Drum volume:	65 l
Door Frame:	Silver-black grey
Color Buttons:	white
Noise level washing:	48 dB(A) re 1pW
Connection rating:	2300 W
Fuse protection:	10 A
Voltage:	220-240 V
Frequency:	50 Hz
Energy Star Qualified:	No
Cord Included:	Yes
Plug type:	GB plug
Length of supply hose (in):	59.05 "
Dimensions of the packed product:	34.44 x 25.98 x 27.16
Net weight:	160.000 lbs
Gross weight:	161.000 lbs
Length of drain hose:	150.00 cm
Length of supply hose:	150.00 cm
Dimensions of the packed product (HxWxD):	875 x 660 x 690 mm
Gross weight:	73.2 kg
Connection rating:	2300 W
Fuse protection:	10 A
Voltage:	220-240 V
Frequency:	50 Hz
Energy consumption:	1.06 kWh
Water consumption:	55.0 l
Water protection system:	Aquastop
Max. spin speed:	1400 rpm
Spin speed options:	Variable
Digital countdown indicator:	Yes
Progress indicator:	LED-display
Capacity:	8.0 kg

4 242002 925479

Series 8, Front Load Washing Machine, 8 kg, 1400 rpm WAW28440SG

The washing machine with new design and EcoSilence Drive™: enjoy supremely quiet operation and excellent durability.

- Made in Germany
- 8kg, 1400rpm

Performance

- Capacity 8 kg
- Maximum Spin Speed 1400 rpm
- Label: A / A / B
- 40% more economical (0,27 kWh/kg) than the standard value (0,48 kWh/kg) for qualifying for energy efficiency class A.
- Electricity Consumption: 1.06 kWh
- Large drum size at 65 litres

Programmes

Options

- VarioPerfect: time - or energy optimized programs with perfect wash performance

Convenience and Safety

- VarioDrum's breakthrough wave-droplet design provides a thorough yet gentle clean for fine textiles
- 32 cm porthole, silver-black grey with 171° opening door
- Magnet with pull-open latch
- Reload function
- EcoSilence Drive
- AntiVibration Side Panels reduce vibrations and ensure greater stability during the washing and spinning process
- Sound insulation by bottom cover
- Flow-through sensor
- ActiveWater™Plus: resource gentle watermanagement
- AquaStop with guarantee
- Continuos automatic load adjustment
- Control dial with integrated On-/Offmode
- Large LED-Display for programme status indication, temperature selection, max. spin speed, remaining time and 24 h end time delay
- Foam detection system to remove excessive foam
- Child Proof Lock
- Buzzer warning signal
- Self cleaning detergent drawer

Technical information

- Dimensions (H x W x D): 84.8 cm x 59.8 cm x 59.0 cm
- Built-under option
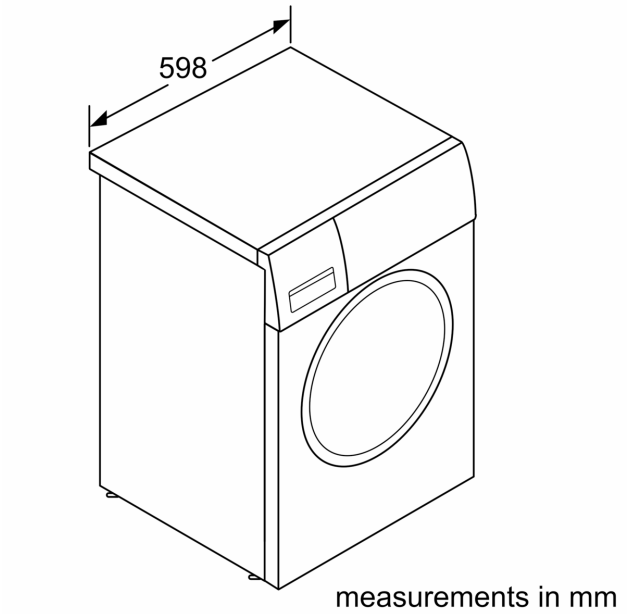
Series 8, Front Load Washing Machine, 8 kg, 1400 rpm
WAW28440SG