Series 6, Built-in Bottom Freezer, 177.2 x 55.8 cm, flat hinge KIN86AF30O

KS10Z010	Snackbox
KS10Z020	Bottle Rack
KSZ10010	Snackbox
KSZ10020	Bottle Rack

A premium bottom freezer refrigerator withVitafresh plus to ensure your vegetables and fruits last longer

- **LED lighting**: keep your groceries in perfect view.
- **Vario Zone**: more flexibility due to variable-use glass shelves and drawers in the freezer compartment.
- **Big Box drawer**: for stacking storage containers or for large frozen food items.
- **Easy Access Shelf**: pull-out glass shelf gives you better access to the contents of your fridge.
- **VarioShelf**: space for bottles and bowls with sectioned glass shelves that can be separated and slid underneath.

Built-in / Free-standing: ..... Built-in
Number of compressors: 1
Number of independent cooling systems: 2
Width of the appliance: ..... 558 mm
Height: ..... 1772 mm
Depth of the product: ..... 545 mm
Net weight: ..... 69.5 kg
Min. required niche size for installation (HxWxD): 1775.0 x 560 x 550 mm
Door panel options: ..... Not possible
Door hinge: ..... Right reversible
Number of Adjustable Shelves in fridge compartment: 4
Shelves for Bottles: ..... No
Frost free system: ..... Fridge
Interior ventilator: ..... Yes
Reversible Door Hinge: ..... Yes
Length electrical supply cord: ..... 230.0 cm
Noise level: ..... 38 dB(A) re 1pW
Multi-Flow Air Tower: ..... No
Fast cooling switch: ..... Yes
Fast freezing switch: ..... No
Temperature Controlled Drawer: ..... No
Humidity Control Drawer: ..... Yes
Number of door bins - Refrigerator: 4
Door bin adjustability - Refrigerator: ..... Yes
Tilt-out door bins in fridge: ..... Yes
Gallon Storage: ..... Yes
Number of Gallon storage: 1
Motorized Shelf: ..... No
Material ofthe shelves: ..... Safety glass
Door opened indicator freezer: ..... No
Automatic motor-driven ice-maker: ..... No
Connection rating: ..... 90 W
Fuse protection: ..... 10 A
Voltage: ..... 220-240 V
Frequency: ..... 50-60 Hz
Storage Period in Event of Power Failure (h): ..... 13 h
Door panel options: ..... Not possible
Noise level: ..... 38 dB(A) re 1pW
Energy Star Qualified: ..... No
Plug type: ..... GB plug
Required cutout/niche size for installation (in): x
Dimensions of the packed product: ..... 72.44 x 24.01 x 25.19
Net weight: ..... 153.000 lbs
Gross weight: ..... 165.000 lbs

4 242005 123711

Series 6, Built-in Bottom Freezer, 177.2 x 55.8 cm, flat hinge KIN86AF30O

A premium bottom freezer refrigerator withVitafresh plus to ensure your vegetables and fruits last longer

General Data

- Gross Capacity: 273 l
- Net Capacity (Total): 254L
- Net Capacity (Fridge): 187L
- Net Capacity (Freezer):67 L
- Energy Efficiency Rating: A++ Star Rating
- Dimensions (HxWxD): 177.2 cm x 55.8 cm x 54.5 cm
- Gross Weight: 75 kg
- Net Weight: 69.5 kg

Cooling System

- Automatic defrost cooling system
- Power ventilation for uniform air circulation
- Supercooling - Automatically brings down the temperature of the refrigerator to cool new groceries rapidly.
- Superfreezing - Automatically brings down the temperature of the freezer to keep cool new items rapidly.

Convenience & Safety

- Electronic Temperature Control
- Separate temperature controls for Fridge and Freezer
- LED illumination in fridge
- No frost freezer

Fridge Compartment

- 1 VitaFresh Plus drawer keeps food fresh for up to twice as long
- 5 safety glass shelves
- 1 Large door trays (Large)
- 3 Small door trays (Small)
- 1 Dairy compartment

Freezer Compartment

- 3 Pull-out drawers, including 1 easy access freezer box
- Freezing Capacity: 8 kg/ 24h

Accessories

- egg tray, cold accumulator, ice cube tray

Series 6, Built-in Bottom Freezer, 177.2 x 55.8 cm, flat hinge
KIN86AF30O

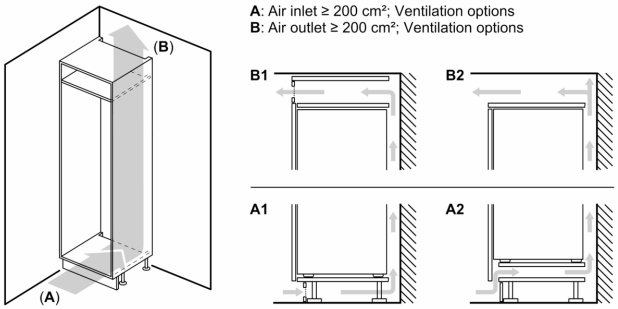

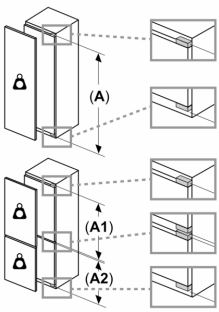

Maximal permissible weight of the unit fronts

Fitted unit fronts that exceed the permissible weight may cause damage and result in functional impairment of the hinges

Weight

A: Appliance door height including hinges in mm

B: Undamped hinge, unit front in kg

C: Damped hinge, unit front in kg

D: Additional possible load in kg with heavy load kit

A	B	C	D
1500-1750	22	22	B+5 / C+5
720-1400	19	19	
A1	15	19	
A2	15	19	

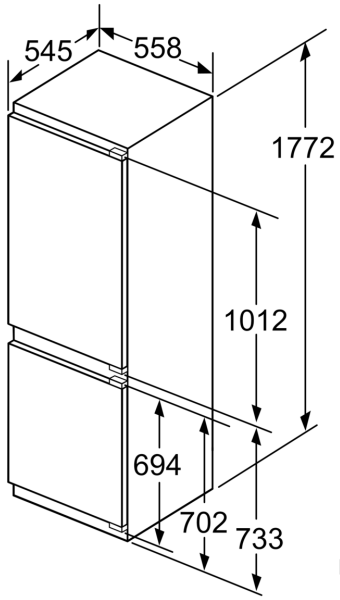

measurements in mm

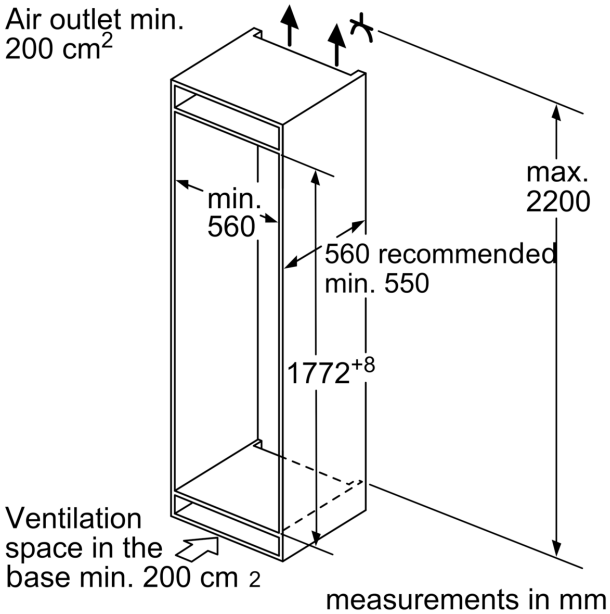

measurements in mm

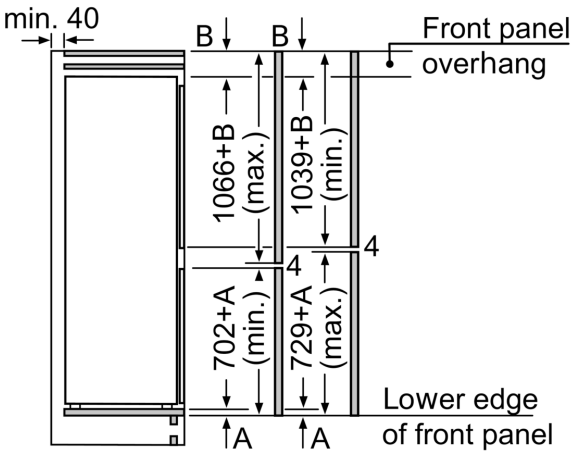

The specified unit door dimensions are valid for a door gap of 4 mm.

measurements in mm

measurements in mm
Recommended gap dimensions for flat hinges

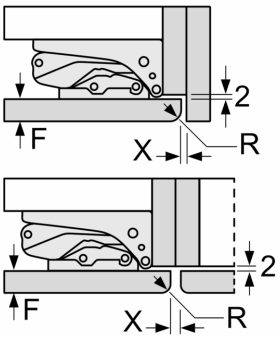

F	R	X
16-19	0-3	2.5
20	0-1	3
	2-3	2.5
21	0-1	3
	2-3	2.5
22	0	4
	1	3.5
	2-3	3

The gap dimensions recommended in the table must be adhered to in order to ensure that appliance doors do not collide with anything when they are opened, and to avoid causing damage to kitchen units.