Series 8, Built-in oven, 60 x 60 cm, Black
HBG675BB1

A+

1 x enamel baking tray, 1 x combination grid, 1 x universal pan

HEZ327000 Pizza stone, HEZ530000 Half tray, HEZ531010 Baking tray, non-stick ceramic coated, HEZ532010 Universal pan, non-stick ceramic coated, HEZ617000 Pizza pan, enamelled, HEZ625071 Grill tray, anthracite, HEZ631070 Baking tray, enamelled, HEZ632070 Multipurpose pan, enamelled, HEZ633001 Lid for professional pan, enamelled, HEZ633070 Professional pan with grid, enamelled, HEZ634000 Baking and roasting grid, HEZ635000 Barbecue-Set, HEZ636000 Glass pan, HEZ638170 1 level telescopic rail, full ext, pyro, HEZ638270 2 level telescopic rails, full ext,pyro, HEZ638370 3 level telescopic rails, full ext,pyro, HEZ660050 Cover Strip, HEZ664000 Baking and roasting grid, steam, HEZ915003 Glass roasting dish, 5,4 L, HEZG0AS00 Connecting cable 3m

The built-in oven with AutoPilot: automatically prepares perfect dishes.

- **4D hotair**: even heat distribution for perfect results – on any level.
- **AutoPilot 10**: every dish is a perfect success thanks to 10 pre-set automatic programmes.
- **TFT Touch Display**: easy-to-use thanks to the Control Ring with clear text and symbols.
- **Pyrolytic self-cleaning**: no cleaning effort thanks to automatic self-cleaning.
- **Flap door with SoftOpen and SoftClose**: the oven door opens and closes especially gently and quietly.

Gross weight: ..... 40.5 kg
Built-in / Free-standing: ..... Built-in
Integrated Cleaning system: ..... Pyrolytic+Hydrolytic
Min. required niche size for installation (HxWxD): 585-595 x 560-568 x 550 mm
Dimensions: ..... 595x594x548 mm
Dimensions of the packed product (HxWxD): ..... 670 x 670 x 680 mm
Control Panel Material: ..... Glass
Door Material: ..... Glass
Net weight: ..... 38.1 kg
Usable volume of cavity: ..... 71 l
Number of interior lights: 1
Length electrical supply cord: ..... 120.0 cm
Interior Lights - cavity 1: 1
Pull-out system: ..... Accessory
Included accessories: 1 x enamel baking tray, 1 x combination grid, 1 x universal pan
Broil Element Wattages cavity 1: ..... 2800 W
Convection Element Wattages cavity 1: ..... 2200 W
Energy efficiency class: ..... A+
Energy consumption per cycle conventional (2010/30/EC): ..... 0.87 kWh/cycle
Energy consumption per cycle forced air convection (2010/30/EC): 0.69 kWh/cycle
Energy efficiency index (2010/30/EC): ..... 81.2 %
Connection rating: ..... 3600 W
Fuse protection: ..... 16 A
Voltage: ..... 220-240 V
Frequency: ..... 60; 50 Hz
Plug type: ..... Gardy plug w/ earthing
Alternative colors available: HBG675BS1, HBG675BW1
Energy input: ..... Electric
Required cutout/niche size for installation (in): x
Dimensions of the packed product: ..... 26.37 x 26.37 x 26.77
Net weight: ..... 84.000 lbs
Gross weight: ..... 89.000 lbs
Length electrical supply cord: ..... 120.0 cm
Net weight: ..... 38.1 kg

4 242002 808673

Series 8, Built-in oven, 60 x 60 cm, Black
HBG675BB1

The built-in oven with AutoPilot: automatically prepares perfect dishes.

Type of oven / heating system:

- Oven with 13 heating methods: 4D hotair, Hotair Eco,, Conventional heat, Conventional heat ECO, Hot air grilling, Full width grill, Half width grill, Pizza setting, Bottom heat, Low temperature cooking, Defrost, Preheating, Hold warm
- Temperature range 30 °C - 300 °C
- Cavity volume: 71 l

Hook-in racks / rails

- Number of shelf levels: 5 PC
- Accessory, pyrolitic proof

Design:

- Rotary swivel

Cleaning:

- Pyrolytic self-cleaning function
- Full glass inner door

Comfort:

- 2,5“-TFT-color and text display with touch-control buttons
- Electronic clock
- Temperature proposal
- Actual temperature display Heating-up control Sabbath setting
- AutoPilot 10
- Oven door with SoftOpen and SoftClose, Drop down door
- Bar handle
- Supporting systems: Programs
- Rapid heating-up
- Halogen interior lighting, Switch for oven illumination
- Integral cooling fan

Accessory:

- universal pan, combination grid, enamel baking tray

Environment and Safety:

- very low door temperature
- Low door temperature during pyrolitic cleaning
- Automatic door lock during pyrolysis
- Child lock Automatic switch off Residual heat indicator Start-/Stop button Door contact switch

Technical Information

- Length of mains cable: 120 cm
- Nominal voltage: 220 - 240 V
- Total connected load electric: 3.6 KW
- Energy efficiency rating (acc. EU Nr. 65/2014): A+(at a range of energy efficiency classes from A+++ to D)
- Energy consumption per cycle in conventional mode:0.87 kWh
- Energy consumption per cycle in fan-forced convection mode:0.69 kWh
- Number of cavities: 1 Heat source: electrical Cavity volume:71 l

Dimensions:

- Appliance dimension (hxwxd): 595 mm x 594 mm x 548 mm
- Niche dimension (hxwxd): 585 mm - 595 mm x 560 mm - 568 mm x 550 mm
- “Please reference the built-in dimensions provided in the installation drawing”
- We recommend you to choose complementary products within Series 8, in order to assure an optimal design combination of your Built-In appliances.

Series 8, Built-in oven, 60 x 60 cm, Black
HBG675BB1

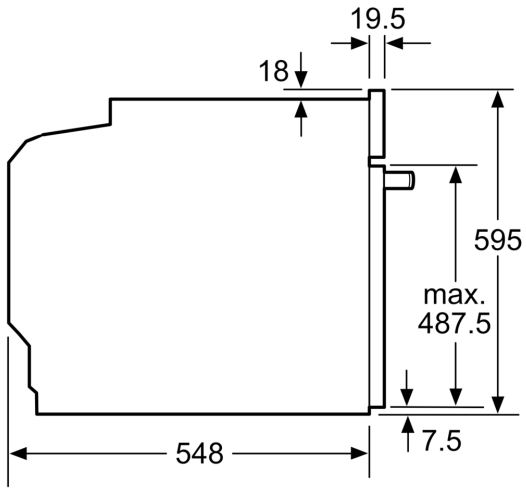

measurements in mm

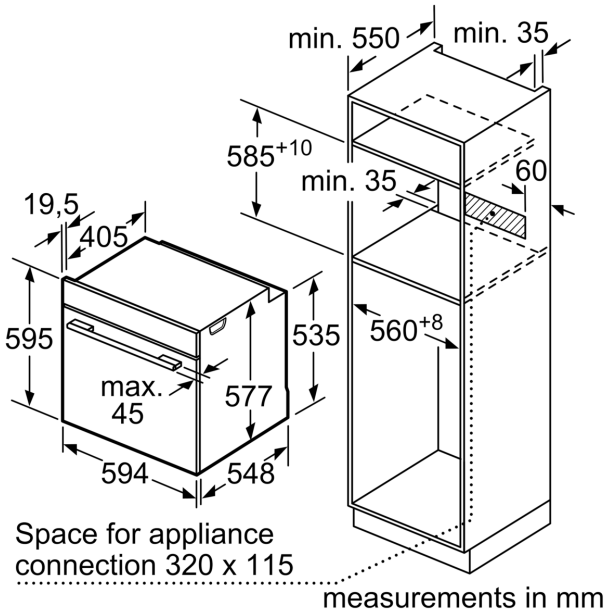

measurements in mm

If the appliance will be installed underneath a hob, the following worktop thicknesses (including substructure if necessary) must be taken into account.

Hob type	min. worktop thickness	
	fitted	flush
Induction hob	37 mm	38 mm
Full surface Induction hob	47 mm	48 mm
Gas hob	30 mm	38 mm
Electric hob	27 mm	30 mm

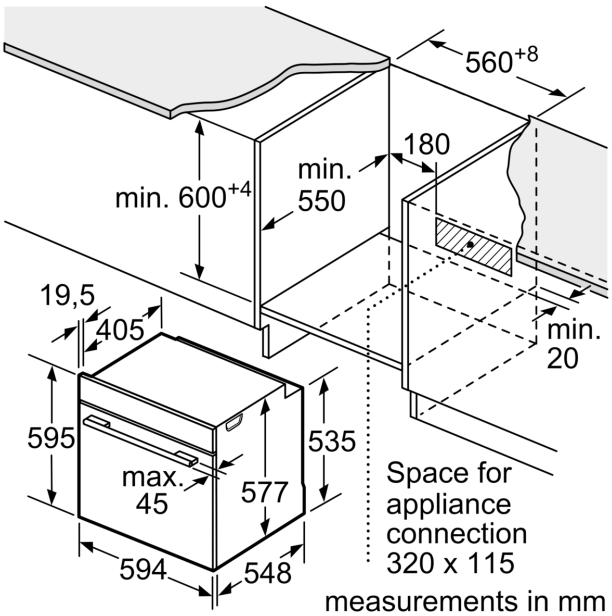

measurements in mm