iQ300, condenser tumble dryer, 8 kg
WT46G402IN

iSensoric condenser dryer with sensor-controlled autoDry technology and softDry drum for optimal textile care.

- ✓ For gentle, precise drying that protects clothes – autoDry technology
- ✓ Gently and perfectly dried functional clothes - Outdoor.
- ✓ easyClean filter: Easy to keep clean
- ✓ softDry drum system: Soft and gentle drying
- ✓ Anti-Vibration Side Panels reduce vibrations and ensure greater stability during the washing and spinning process.

Built-in / Free-standing:	Freestanding
Removable top:	No
Door hinge:	Right
Color / Material body:	Silver
Length electrical supply cord:	145.0 cm
Dimensions:	842 x 598 x 613 mm
Net weight:	41.0 kg
Drum volume:	112 l
Connection Rating:	2600 W
Fuse protection:	13 A
Voltage:	220-240 V
Frequency:	50 Hz
Drying process:	automatic
Capacity:	8.0 kg
Energy efficiency rating:	B

4 242003 835937

WZ20540S	Platform with pull-out

SIEMENS

iQ300, condenser tumble dryer, 8 kg
WT46G402IN

Technical Information

- Capacity: 8 kg
- Dimensions (HxWxD): 84.2cm x 59.8cm x 59.9cm (65.2cm with door frame)
- Noise level: pleasantly quiet at 65dB(A)

Programmes

- Cottons Cupboard Dry Extra, Cottons Cupboard Dry, Cottons Iron Dry, Outdoor, AllergyPlus/Hygiene, Mix Load, Time Prog. Warm, Time Prog. Cold, Delicates, Woolen Finish, SuperQuick 40', Shirts 15', Easy-Care Iron Dry, Easy-Care Cupboard Dry, Easy-Care Cupboard Dry Extra

Features

- AutoDry saves time and energy by automatically stopping the drying process once it's complete
- AntiVibration Side Panels reduce vibrations and ensure greater stability during the washing and spinning process.
- Anti-crease cycle 120min at the end of programme
- Sensitive Drying system combines warm air currents and a gentle drum structure for dry clothes

Safety

- Duo-Tronic Sensors monitors moisture levels and temperature to reach desired levels of dryness and to prevent overheating
- Buzzer at the end of the wash programme

SIEMENS

iQ300, condenser tumble dryer, 8 kg
WT46G402IN

Measurements in mm

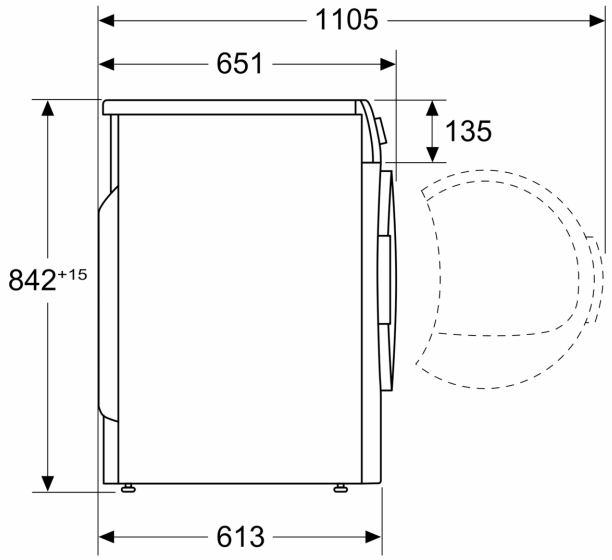
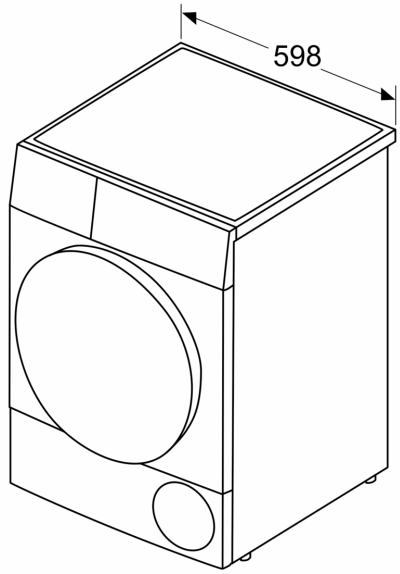
Measurements in mm