iQ500
ET375FUB1E
30 cm Black Electronic control cooking zone

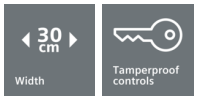

Included accessories

1 x lava stones

Grilling with pleasure in the kitchen – perfect grilling results with a minimum of smoke thanks to the Domino lava grill.

- ✓ The 30 cm wide lava grill is ideal for combining with other Domino or faceted design cooktops.
- ✓ touchSlider control allows to control the temperature by entering it directly or by moving the slider with a single finger.
- ✓ Tastefully integrated into the Domino unit when not in use, thanks to the high-quality glass ceramic cover.
- ✓ Two grill variants – grilling over lava stones or water bath.

Features

Technical Data

Product name/family : Vario/Domino barbecue grill
Built-in / Free-standing : Built-in
Energy input : Electric
Type of control : Electronic
Grill grating material : Cast iron
Required niche size for installation (HxWxD) : 236 x x
Width of the product (mm) : 302
Dimensions of the product (mm) : 236 x 302 x 520
Dimensions of the packed product (HxWxD) (mm) : 280 x 385 x 610
Net weight (kg) : 12.638
Gross weight (kg) : 15.0
Residual heat indicator : Separate
Basic surface material : Cast iron
Color of surface : Alu, brushed, Black
Color of frame : Alu, brushed
Approval certificates : Australia Standards, CE, Eurasian, Ukraine, VDE
Length electrical supply cord (cm) : 100
Electrical connection rating (W) : 2400
Current (A) : 13
Voltage (V) : 220-240
Frequency (Hz) : 50; 60

4 242003 687635

Manufactured by <BSH Legal Name> under Trademark License of Siemens AG

iQ500
ET375FUB1E
30 cm Black Electronic control cooking zone

Features

Design:
- Electronic display, red
- Cooking zone power: 3.3kW, 3.6kW with booster
- ET375FUB1E
- Removable ceramic black glass lid

Features:
- Removable cast iron grille for easy cleaning
- Stainless steel grill to be used with water or lava stones (Lava stones included)
-
-
- Electronic display
- 17 power levels
-
-
-
-
- Wipe protection function
-
-
- Basin capacity: 2.5 l
- Cutout Dimensions (W x D): NO_FEATURE x NO_FEATURE

NO_FEATURE
- Main on/off switch
- Power on indicator light
-
-
- Two stage residual heat indicators
- Safety lock
- Automatic safety switch off
- Appliance dimensions (H x W x D): 24 cm x 30 cm x 52 cm

Professional equipment:
-
-

Dimensions:
- Appliance Dimensions (HxWxD): 23.6 cm x 30.2 cm x 52 cm

iQ500
ET375FUB1E
30 cm Black Electronic control cooking zone

Dimensioned drawings

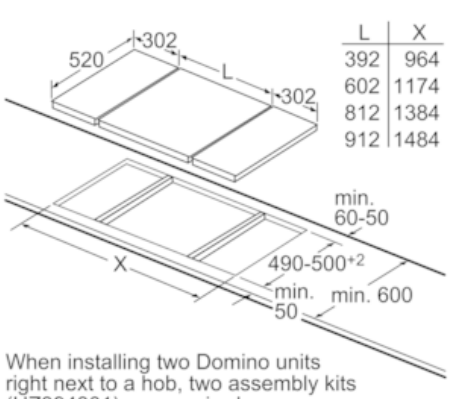

L	X
392	964
602	1174
812	1384
912	1484

When installing two Domino units right next to a hob, two assembly kits (HZ394301) are required.

measurements in mm

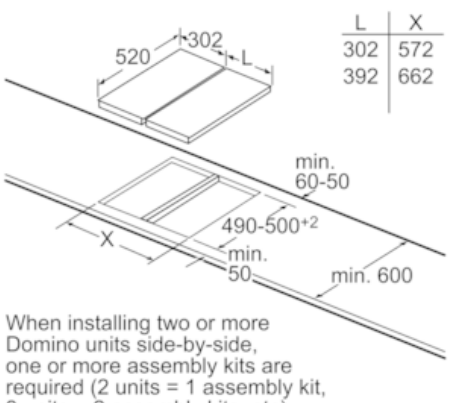

L	X
302	572
392	662

When installing two or more Domino units side-by-side, one or more assembly kits are required (2 units = 1 assembly kit, 3 units = 2 assembly kits, etc).

Measurements in mm

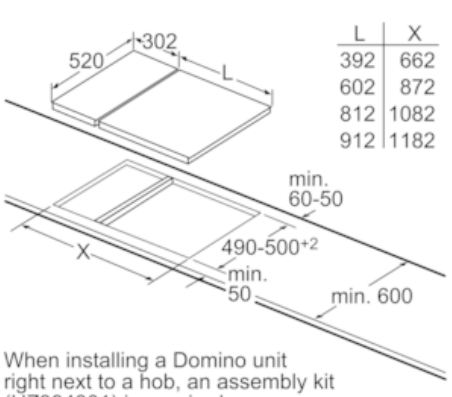

L	X
392	662
602	872
812	1082
912	1182

When installing a Domino unit right next to a hob, an assembly kit (HZ394301) is required.

measurements in mm

Assembly kit (HZ394301) for Domino

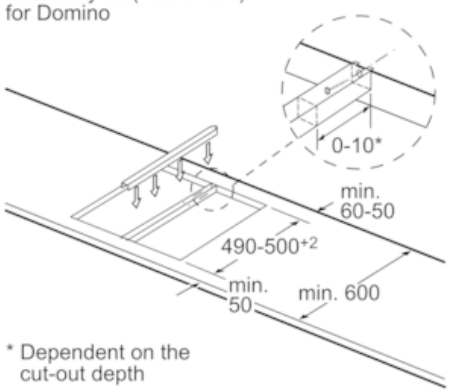

* Dependent on the cut-out depth

Measurements in mm

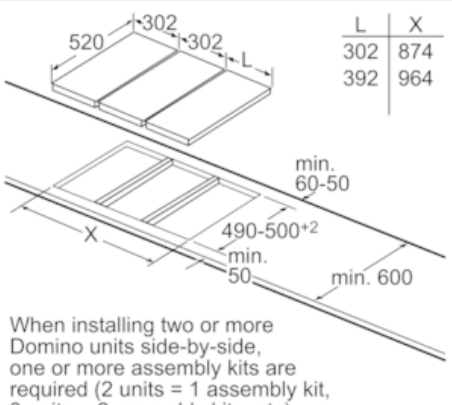

L	X
302	874
392	964

When installing two or more Domino units side-by-side, one or more assembly kits are required (2 units = 1 assembly kit, 3 units = 2 assembly kits, etc).

Measurements in mm

Picture for the table Domino combination possibilities with corresponding devices and cutout dimensions

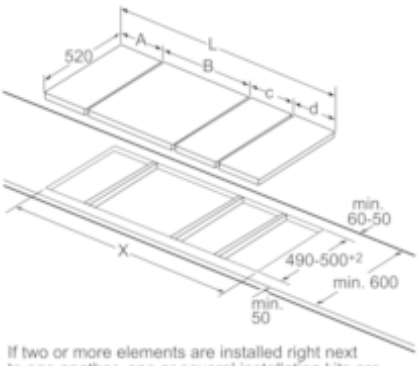

If two or more elements are installed right next to one another, one or several installation kits are required (2 elements 1 installation kit, 3 elements 2 installation kits, etc.).

Cutout dimension (X) depending on the combination see table:

Dimensions in mm

iQ500
ET375FUB1E
30 cm Black Electronic control cooking zone

Dimensioned drawings

measurements in mm
Domino combination options with corresponding appliance and cut-out dimensions

Width type:	30	40	60	70	80	90
Appliance width:	302	392	602	710	812	912

	A	B	C	D	L	X
2x30	302	302	-	-	604	**572**
1x30, 1x40	302	392	-	-	694	**662**
1x30, 1x60	302	602	-	-	904	**872**
1x30, 1x70*	302	710	-	-	1012	**980**
1x30, 1x80	302	812	-	-	1114	**1082**
1x30, 1x90	302	912	-	-	1214	**1182**
2x40	392	392	-	-	784	**752**
1x40, 1x60	392	602	-	-	994	**962**
1x40, 1x70*	392	710	-	-	1102	**1070**
1x40, 1x80	392	812	-	-	1204	**1172**
1x40, 1x90	392	912	-	-	1304	**1272**
3x30	302	302	302	-	906	**874**
2x30, 1x40	302	302	392	-	996	**964**
2x30, 1x60	302	302	602	-	1206	**1174**
2x30, 1x70*	302	302	710	-	1314	**1282**
2x30, 1x80	302	302	812	-	1416	**1384**
2x30, 1x90	302	302	912	-	1516	**1484**
1x30, 2x40	302	392	392	-	1086	**1054**
1x30, 1x40, 1x60	302	392	602	-	1296	**1264**
1x30, 1x40, 1x70*	302	392	710	-	1404	**1372**
1x30, 1x40, 1x80	302	392	812	-	1506	**1474**
1x30, 1x40, 1x90	302	392	912	-	1606	**1574**
3x40	392	392	392	-	1176	**1144**
2x40, 1x60	392	392	602	-	1386	**1354**
4x30	302	302	302	302	1208	**1176**
3x30, 1x40	302	302	302	392	1298	**1266**
2x30, 2x40	302	302	392	392	1388	**1356**
1x30, 3x40	302	392	392	392	1478	**1446**
1x30, 1x75	302	750	-	-	1052	**1016**
1x40, 1x75	392	750	-	-	1142	**1106**
2x30, 1x75	302	302	750	-	1354	**1318**
1x30, 1x40, 1x75	302	392	750	-	1444	**1408**

* Not possible with 70 cm induction hob