Series 4, Condenser tumble dryer, 8 kg
WTE84305GB

- **Auto Dry**: automatically dries to the exact level of dryness you want.
- **Anti Vibration Design**: stable and quiet thanks to special vibration protection.
- **Fast drying**: dries a full load considerably fast.
- **Sensitive Drying System**: for gentle drying without any creases.
- **Sportswear**: ideal for gentle drying of textiles such as microfibre, synthetics or functional fibres.

Built-in / Free-standing:	Free-standing
Removable top:	Yes
Door hinge:	Right
Length electrical supply cord:	145.0 cm
Dimensions:	842x598x639 mm
Net weight:	45.0 kg
EAN code:	4242002720616
Connection rating:	2600 W
Fuse protection:	13 A
Voltage:	220-240 V
Frequency:	50 Hz
Loading capacity:	8.0 kg

4 242002 720616

WMZ20500	Platform with pull-out
WTZ10290	Cover plate
WTZ1110	Condenser drainage kit
WTZ11300	Stacking kit with pull-out shelf
WTZ11310	Stacking kit

Series 4, Condenser tumble dryer, 8 kg
WTE84305GB

Performance

- B Energy Class
- Capacity: 8 kg
- Consumption of 8 kg cotton cupboard dry: 1400 rpm - 3.74 kWh - 105 min 1000 rpm - 4.49 kWh - 122 min
- Noise level:drying 61dB (re 1pW)

Programmes/functions

- Fully electronic control dial for sensor drying programmes and timed programmes
- Special programmes: Woollens, Mixed Load, Sportswear, Timed Programme 20 minutes warm, Super Quick 40
- Special drying programme: Mixed Load, Woollens, Sportswear
- Touch control buttons: Start/Stop, Low heat, Time Delay, Reduced Ironing

Key features

- Sensitive drying: large stainless steel drum with textile care and revolution drying system

Additional features

- LC Display for time remaining and 24 hours time delay
- LED programme progress indicator, fluff filter and condensed water container full
- Anti crease cycle 120 min at the end of the programme
- Buzzer to indicate the end of cycle
- Metal door catch

Technical Information

- Can be built-under
- Round solid door,, white

Series 4, Condenser tumble dryer, 8 kg
WTE84305GB

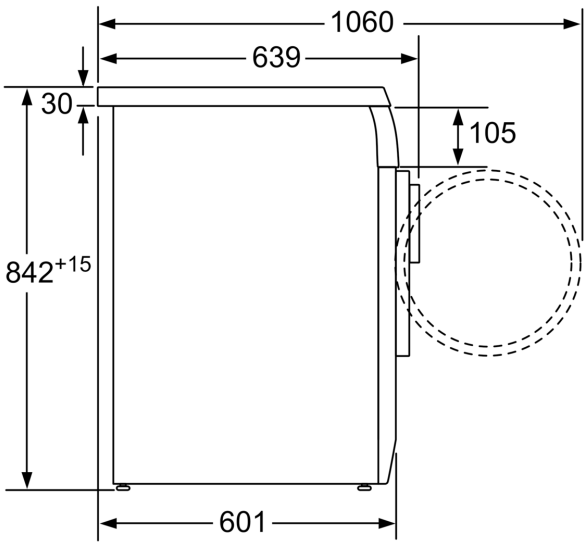

measurements in mm

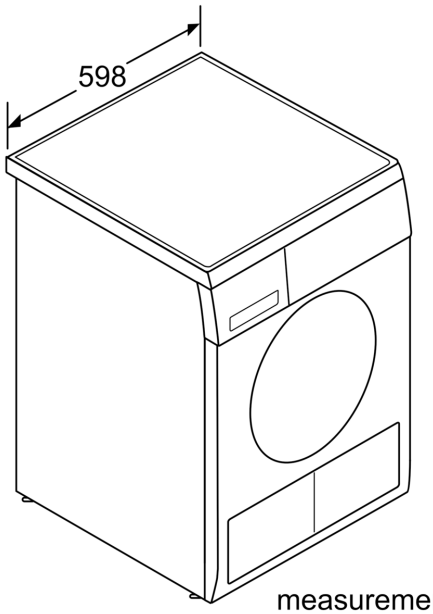

measurements in mm