Series 6, Gas hob, 60 cm, Black
PCP6A6B90

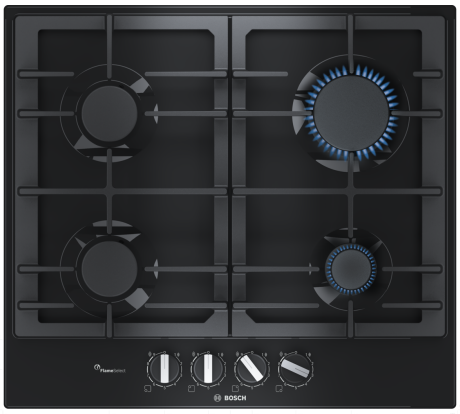

- **FlameSelect**: adjust the gas flame precisely using nine defined levels.
- **Continuous cast-iron pan support**: for high firmness and stability of cookware.
- **Biomethane-ready**: your gas hob can also be powered with renewable biomethane gas.
- **Sword knobs**: for an ergonomic control.
- **Surface colour**: elegant black enamel design.

HEZ298105	Simmer plate
HEZ298115	Small pot support

Product name/family: .....gas hob w integrated controls
Built-in / Free-standing: .....Built-in
Energy input: .....Gas
Number of cooking zones: 4
Type of control setting devices: .....sword knobs
Min. required niche size for installation (HxWxD): .....45 x 560-562 x 480-492 mm
Width of the appliance: .....582 mm
Dimensions: .....53x582x520 mm
Dimensions of the packed product (HxWxD): ..... 141 x 651 x 578 mm
Net weight: .....11.2 kg
Gross weight: .....12.0 kg
Residual heat indicator: .....without
Location of control panel: .....Front
Basic surface material: .....Enamel
Color of surface: .....Black
Length electrical supply cord: .....100.0 cm
EAN code: 4242002914404
Gas connection rating: .....7500 W
Fuse protection: .....3 A
Voltage: .....220-240 V
Frequency: .....60; 50 Hz

4 242002 914404

Series 6, Gas hob, 60 cm, Black
PCP6A6B90

Design

- Enamel surface, Black
- Cast iron pan supports

Usage convenience

- FlameSelect: precisely control and adjust the flame in nine defined levels.
- Design co-ordinated control dials: easily access dials in front with strong grip for effortless turning.
- Ignition via control dials: just push and turn the dials to ignite the flame.

Burners and power

- 4 gas burners
- Left front: Standard burner up to 1.75 KW (depending on gas type)
- Left rear: Standard burner up to 1.75 KW (depending on gas type)
- Right rear: High-speed burner up to 3 KW (depending on gas type)
- Right front: Economy burner up to 1 KW (depending on gas type)

Safety

- Flame failure safety device: prevents unwanted gas flow when flame goes out.

Installation (gas types & measurements)

- Usable for: Nat gas L/LL G25/20mbar(DE)
- NG H/E 20mbar, E+ 20/25mbar Natural gas H 25 mbar (HU) Natural gas L 25 mbar (NL) Liquid gas G30,31 28-30/37mbar Liquid gas G30 37 mbar (PL) Liquid gas 50 mbar
- Pre-set for natural gas
- Nozzle set for LPG jets included. Connection to 28-30/37 mbar bottled gas. Nozzles for all other gas types can be ordered via the customer service. For nozzle change, please contact the customer service.
- Dimensions of the product (HxWxD mm): 53 x 582 x 520
- Required niche size for installation (HxWxD mm) : 45 x 560 x (480 - 492)
- Min. worktop thickness: 30 mm
- Power cord: 1 m
- Connected load: 7.5 KW

Series 6, Gas hob, 60 cm, Black
PCP6A6B90

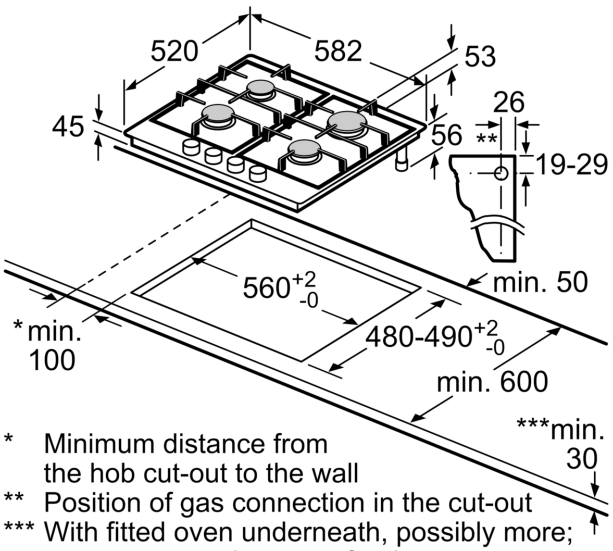

* Minimum distance from the hob cut-out to the wall
** Position of gas connection in the cut-out
*** With fitted oven underneath, possibly more; see space requirements for the oven

measurements in mm