SIEMENS

Chimney extension, 1500 mm
LZ12365

- ✓ Extension 1500 mm (telescopic part) for wall chimney hood
- ✓ 480 mm - 920 mm extension of the appliance possible
- ✓ Suitable for ducted and re-circulated extraction
- ✓ Extension with recirculation slots

Dimensions of the packed product (HxWxD): . 1580 x 325 x 425 mm
Pallet dimensions: ..... 185.0 x 80.0 x 120.0
Standard number of units per pallet: 4
Weight: ..... 4.4 kg
Gross weight: ..... 10.3 kg
EAN code: 4242003542613

4 242003 542613

SIEMENS

Chimney extension, 1500 mm
LZ12365

Optional accessories

- Extension 1500 mm (telescopic part) for wall chimney hood
- 480 mm - 920 mm extension of the appliance possible
- Suitable for ducted and re-circulated extraction
- Extension with recirculation slots

SIEMENS
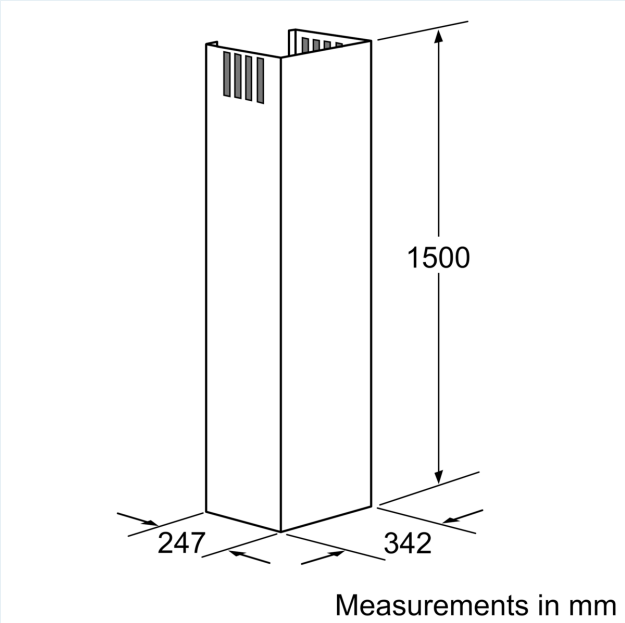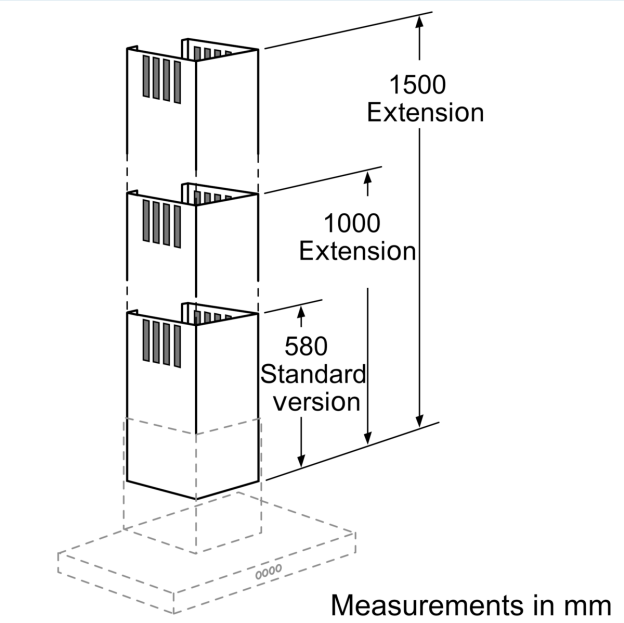
Chimney extension, 1500 mm
LZ12365