SIEMENS

IQ700, Island cooker hood, 90 cm, Stainless steel
LF91BUV50B

A+

LZ00XXP00	Long Life odor filter (replacement)
LZ12285	Chimney extension 1100 mm
LZ12310	Adapter for roof inclination left/right
LZ12385	Chimney extension 1600 mm
LZ12410	Adapter for roof inclination front/back
LZ12510	Extension for mounting kit 500 mm
LZ12530	Extension for mounting kit 1000 mm
LZ22CBI14	Clean Air Standard recirculation kit
LZ22CXC56	Clean Air Plus recirc. kit external
LZ22FXD51	Long Life recirculation kit external
LZ31XXB16	Clean Air Plus odor filter (replacement)
LZ32CBB14	Clean Air Standard odor filter (repl.)

The island hood features a very high extraction rate in a distinguished design that coordinates with a range of Siemens appliances, as well as your kitchen.

- ✓ iQdrive motor - The quiet, high-performance motor ensures efficient removal of odours and steam.
- ✓ cookConnect system and climate control sensor: Perfect cooperation
- ✓ voiceControl – Control hood functions and lighting using your voice.
- ✓ Home Connect – The app that makes your hood work smarter.
- ✓ Illuminate your cooking space with LED lights for optimal visibility and ambience setting.

Typology:	Island/Ceilling
Length electrical supply cord:	130.0 cm
Height of the chimney:	698-878/698-998 mm
Height of the appliance:	46 mm
Minimum distance above an electric hob:	550 mm
Minimum distance above a gas hob:	650 mm
Weight:	29.9 kg
Type of control:	Electronic
Number of speed settings:	3-stage + 2 intensive
Maximum output air extraction:	598 m³/h
Boost position output recirculating:	561 m³/h
Maximum output recirculating air:	462 m³/h
Boost position air extraction:	981 m³/h
Maximum Air flow:	598 m³/h
Number of lights:	4
Noise level:	62 dB(A) re 1pW
Diameter of air outlet:	120 / 150 mm
Grease filter material:	Washable stainless steel
EAN code:	4242003832073
Connection Rating:	266 W
Fuse protection:	10 A
Nominal power:	220-240 V
Frequency:	50; 60 Hz
Plug type:	GB plug
Installation type:	Island

4 242003 832073

SIEMENS

IQ700, Island cooker hood, 90 cm, Stainless steel
LF91BUV50B

Key performance features:

- Energy Efficiency Class: A+ (at a range of energy efficiency classes from A+++ to D)
- Extraction rate according to EN 61591 ø 15 cm:
- max. Normal use598m³/h
- Intensive981 m³/h
- Noise max. Normal Level: 62 dB*

Home Connect: Remote Monitoring and Control

- Home Connect: Remote Monitoring and Control for connected home appliances and operation via smartphone or tablet (only in countries where Home Connect service is available)
- The Home Connect functionality can be extended by integrating numerous applications from external cooperation partners (partnerships)
- Voice Control enabled via popular voice assistants (only in countries where this service is available)
- Interval function: available via Home Connect
- Silence function: available via Home Connect

Features

- touchControl with 7-segment display
- 3 power levels and 2 intensive settings
- Automatic intensive revert (6mins)
- cookConnect hob based hood control
- climateControl sensor
- Fully automatic hood
- softLight with dimmer function
- 4 x 1.5W LED
- Additional noise reduction insulation
- Efficient BLDC motor
- Twin channel high performance fan motor
- Automatic after running (10 minutes)
- Grease and charcoal filter saturation indicators
- 3 x metal grease filter cassettes - dishwasher safe
- Steel filter cover

Design

- Stainless Steel
- For ceiling mounted installation
- Electronic control

Performance/technical information

- Suitable for ducted and re-circulating operation
- For recirculated extraction a recirculating kit or a CleanAir recurculation kit (accessory) is needed
- Max. extraction rate: 981 m3/h
- Noise level according to EN 60704-3 and EN 60704-2-13 exhaust air:
- Max. normal use:62dB(A) re 1 pW
- Intensive:73 dB(A) re 1 pW
- With the Clean Air Plus recirculation kit (available as optional accessory) your appliances reaches:
- Extraction rate in recirculation mode: Max. normal use:462m³/h
- Intensive:561m³/h
- Noise level in recirculation mode: Max. normal use:68dB(A) re 1 pW
- Intensive:72 dB(A) re 1 pW
- Power rating: 266 W
- Light Intensity: 411 lux
- Colour Temperature: 3500 K
- Electrical cable length 1.3 m
- Diameter pipe Ø 150 mm (Ø 120 mm enclosed)
- Dimensions exhaust air (HxWxD): 744-924 x 898 x 600 mm
- Dimensions recirculating, chimney (HxWxD): 744-1044 x 898 x 600mm
- Blower Efficiency Class: A*
- Lighting Efficiency Class: A*
- Grease Filtering Efficiency Class: B*
- Average Energy Consumption: 37.5 kWh/year*

Optional accessories

- Recirculating kit LZ00XXP00

* In accordance with the EU-Regulation No 65/2014
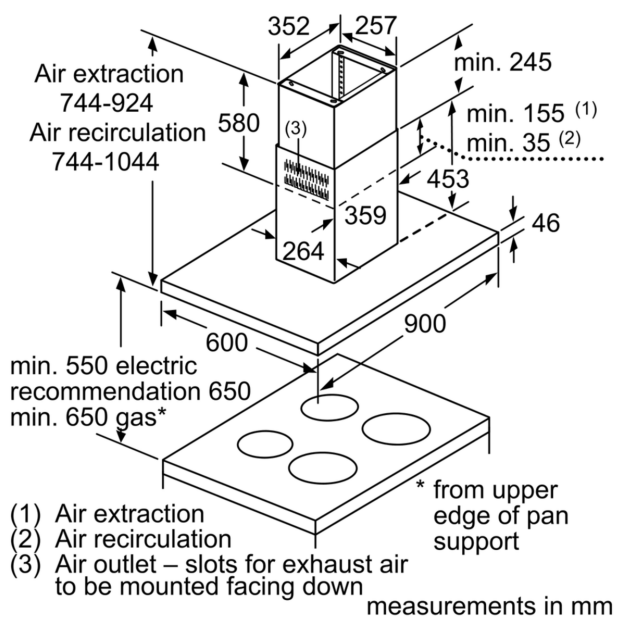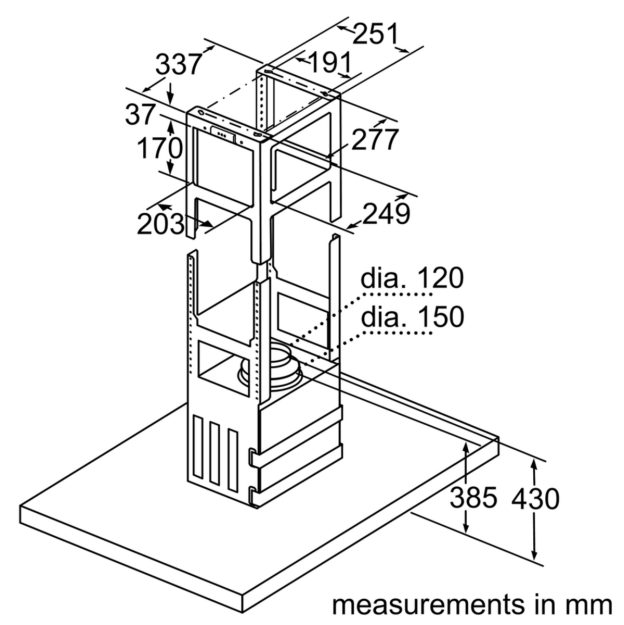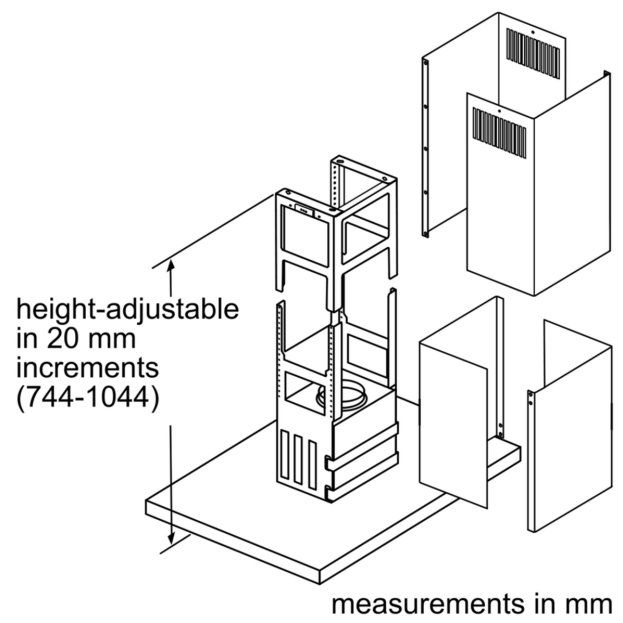
IQ700, Island cooker hood, 90 cm, Stainless steel
LF91BUV50B