Series 4, built-in fridge-freezer with freezer at bottom, 177.2 x 54.1 cm, flat hinge
KIN86VF30G

A++

The bottom freezer with MultiBox and electronic temperature control: set the temperature easily and precisely.

- **LED lighting - with soft start, lasts for the lifetime of the appliance.**
- **VarioZone: more flexibility due to variable-use glass shelves and drawers in the freezer compartment.**
- **Big Box drawer: for stacking storage containers or for large frozen food items.**
- **Intelligent Inverter Technology: ensuring stable temperature control and efficient performance.**
- **SuperFreezing: Protects frozen food from defrosting.**

Technical Data

Built-in / Free-standing: ..... Built-in
Door panel options: ..... Not possible
Height: ..... 1772 mm
Width of the appliance: ..... 541 mm
Depth: ..... 545 mm
Min. required niche size for installation (HxWxD): 1775.0 x 560 x 550 mm
Net weight: ..... 64.6 kg
Connection rating: ..... 90 W
Fuse protection: ..... 13 A
Door hinge: ..... Right reversible
Voltage: ..... 220-240 V
Frequency: ..... 50 Hz
Length electrical supply cord: ..... 230.0 cm
Number of compressors: 1
Number of independent cooling systems: 1
Interior ventilator: ..... No
Reversible Door Hinge: ..... Yes
Number of Adjustable Shelves in fridge compartment: 3
Shelves for Bottles: ..... No
Frost free system: ..... Fridge and freezer
Installation typology: ..... Integrated

4 242002 839578

Optional accessories

KSZ10020 Bottle Rack

Series 4, built-in fridge-freezer with freezer at bottom, 177.2 x 54.1 cm, flat hinge
KIN86VF30G

The bottom freezer with MultiBox and electronic temperature control: set the temperature easily and precisely.

Performance and Consumption

- Energy Efficiency Class: A++
- Energy consumption: 222 kWh kWh/yr.
- Total net capacity: 255 litres
- Net fridge capacity: 188 litres
- Net freezer capacity: 67 litres
- Noise level dB(A) re 1 pW: 39
- Climate class SN-ST (suitable for ambient temperatures between 10 to 38°C)

Design features

- Electronic LED display
- Bright interior LED fridge light
- Right hinged door, reversible door
- 1 compressor

Food freshness system

- FreshSense - Constant temperature control by intelligent sensor technology
- 1 MultiBox - Transparent drawer with a rippled bottom, ideal for storing fruits and vegetables.
- 2 x cold accumulator, 3 x egg tray, 1 x ice cube tray

Key features - Fridge section

- 4 door bins

Key features - Feezer section

- NoFrost freezer, never have to defrost ever again
- 3 transparent freezer drawers, including 1 BigBox
- Freezing capacity in 24 hours: 8 kg
- Maximum freezer storage time in power failure: 13 hours
- Calendar frozen food

Functions

- SuperFreezing function with automatic deactivation

Dimension and installation

- Dimensions: 177.2 cm H x 54.1 cm W x 54.5 cm D
- Niche Dimensions: 177.5 cm H x 56 cm W x 55 cm D
- 220 - 240 V

Series 4, built-in fridge-freezer with freezer at bottom, 177.2 x 54.1 cm, flat hinge
KIN86VF30G

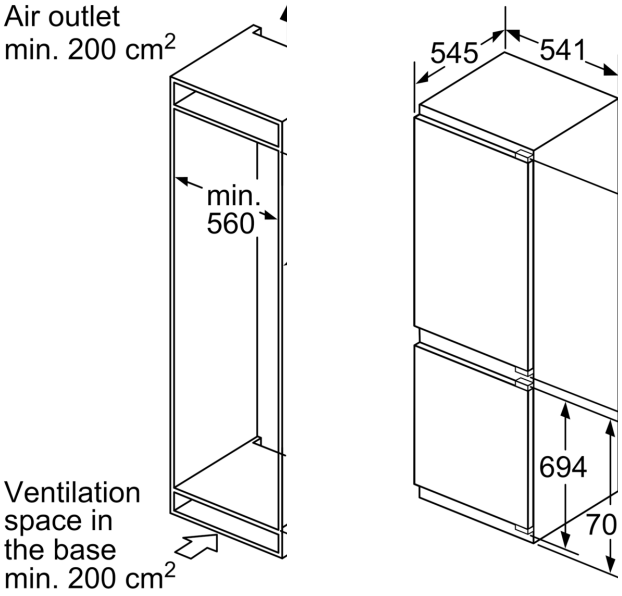

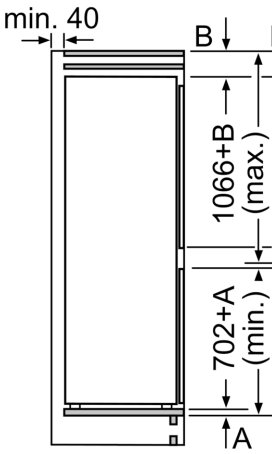

The specified unit doc
are valid for a door ga

measurements in mm
Recommended gap di

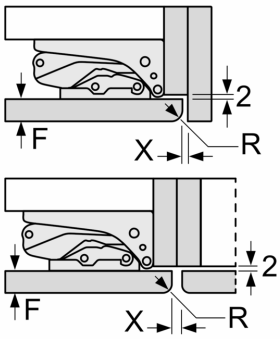

The gap dimensions r
in the table must be a
to ensure that applian
collide with anything v
and to avoid causing