Series 2, Built-in oven, 60 x 60 cm, Black
HHF113BA0B

A

1 x insert grid, 1 x combination grid, 1 x universal pan

HEZ317000	Pizza pan, enamelled
HEZ327000	Pizza stone
HEZ333001	Lid for professional pan
HEZ425000	Grill tray
HEZ431002	Baking tray, enamelled
HEZ915003	Glass roasting dish, 5,4 L

The built-in oven with 3D hot air: achieve perfect baking and roasting results on up to three levels simultaneously.

- **Red LED display control**: easy-to-use thanks to clear time display.

Built-in / Free-standing: ..... Built-in
Integrated Cleaning system: ..... No
Min. required niche size for installation (HxWxD): 575-597 x 560-568 x 550 mm
Dimensions: ..... 595x594x548 mm
Dimensions of the packed product (HxWxD): ..... 660 x 650 x 670 mm
Control Panel Material: ..... metal lacquered
Door Material: ..... Glass
Net weight: .....31.7 kg
Usable volume (of cavity) - cavity 1: .....66 l
Cooking method: .... Hotair gentle, Hot Air, Hot air grilling, Full width variable grill
Oven control: ..... mechanical
Number of interior lights: 1
Length electrical supply cord: ..... 110.0 cm
EAN code: 4242005048328
Number of cavities (2010/30/EC): 1
Energy efficiency rating: .....A
Energy consumption per cycle forced air convection (2010/30/EC): 0.79 kWh/cycle
Energy efficiency index (2010/30/EC): .....95.2 %
Connection rating: ..... 2400 W
Fuse protection: .....13 A
Voltage: ..... 220-240 V
Frequency: ..... 60; 50 Hz
Plug type: ..... GB plug
Included accessories: .....1 x insert grid, 1 x combination grid, 1 x universal pan

4 242005 048328

Series 2, Built-in oven, 60 x 60 cm, Black
HHF113BA0B

The built-in oven with 3D hot air: achieve perfect baking and roasting results on up to three levels simultaneously.

Design

- LED-Display Control (Red)
- Rotary dial, round
- Interior halogen light
- Straight bar handle

Features

- Control panel lock
- Automatic start
- Electronic clock timer
- Integral cooling fan
- 5 shelf positions
- Cavity volume: 66 litre

Cleaning

- Full glass inner door

Programmes/functions

- Oven with 4 cooking functions: heating methods: 3D Hotair, Hotair grilling, Hotair gentle, full width variable grill

Accessories

- 1 x universal pan, 1 x combination grid, 1 x insert grid

Performance/technical information

- 110 cm Cable length
- Temperature range 50 °C - 275 °C
- Nominal voltage: 220 - 240 V
- Total connected load electric: 2.4 KW
- Appliance dimension (hxwxd): 595 mm x 594 mm x 548 mm
- Niche dimension (hxwxd): 575 mm - 597 mm x 560 mm - 568 mm x 550 mm
- Please refer to the dimensions provided in the installation manual

Series 2, Built-in oven, 60 x 60 cm, Black
HHF113BA0B

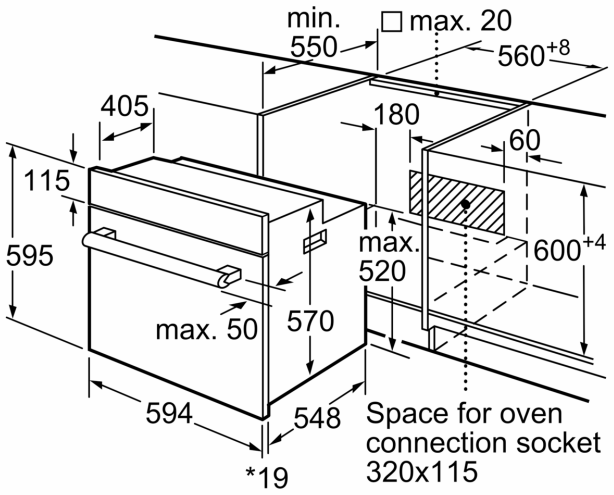

* 20 mm for metal fascias

measurements in mm

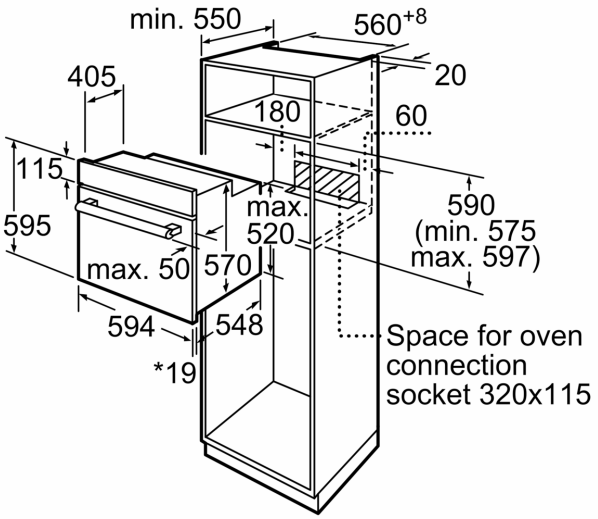

* 20 mm for metal fascias

measurements in mm

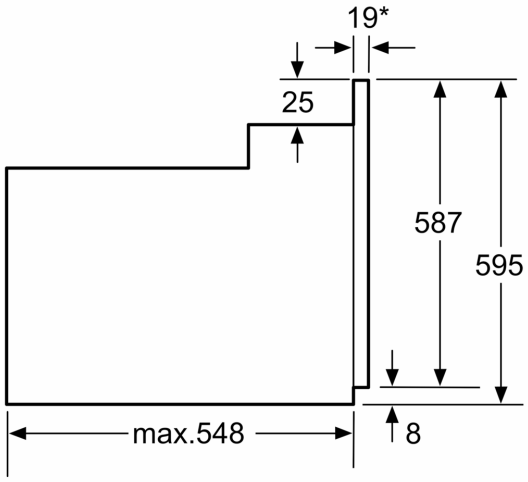

* 20 mm for metal fascias

Dimensions in mm