SIEMENS

IQ300, free-standing freezer, 186 x 60 cm, Inox-easyclean GS36NVIFV

Included accessories

2 x cold accumulator, 1 x ice cube tray

Optional accessories

KS36ZAL00	Connection set inox
KS39ZAL00	Connection set inox

Freezer with innovative noFrost technology, no more defrosting.

- ✓ noFrost – Never defrost your freezer again.
- ✓ varioZone – easily arrange drawers and glass shelves to bring flexibility to your freezer space.
- ✓ MultiAirflow – Minimal temperature fluctuations for reduced cooling times and longer freshness.

Features

Technical Data

Energy Efficiency Class: ..... F
Average annual energy consumption in kilowatt hour per year (kWh/a): ..... 294 kWh/annum
Sum of volume of frozen compartments: ..... 242 l
Airborne acoustical noise emissions : ..... 39 dB(A) re 1 pW
Airborne acoustical noise emission class: C
Thermometer freeze section: ..... Digital
Light: ..... No
Product category: ..... Upright freezer
Built-in / Free-standing: ..... Freestanding
Door panel options: ..... Not possible
Frost free system: ..... Fridge and freezer
Height of the appliance: ..... 1860 mm
Width of the appliance: ..... 600 mm
Dimensions: ..... 650 mm
Dimensions of the packed product (HxWxD): . 1930 x 660 x 770 mm
Weight: ..... 70.9 kg
Gross weight: ..... 76.6 kg
Fuse protection: ..... 10 A
Frequency: ..... 50 Hz
Length electrical supply cord: ..... 230.0 cm
Door hinge: ..... Right reversible
Warning signal / malfunction: ..... Both visual and audible
Door lock: ..... No
Number of drawers/baskets (Stck): 5
Number of freezing flaps (Stck): 2
EAN code: 4242003868058
Brand: ..... Siemens
Product name / Commercial code: GS36NVIFV
Product category: ..... Upright freezer
Included accessories: ..... 2 x cold accumulator, 1 x ice cube tray

4 242003 868058

SIEMENS

IQ300, free-standing freezer, 186 x 60 cm, Inox-easyclean GS36NVIFV

Features

Functions
- Stainless Steel anti-fingerprint doors and Pearl grey (VZF 07127) side panels
- Brushed aluminium Vertical door handle

Design features
- No Frost, never have to defrost ever again
- Electronic control (LED chain)
- Freezer malfunction warning signal: Optical and acoustic malfunction alarm system
- vitaControl - constant temperature by intelligent sensor - Constant temperature control by intelligent sensor technology
- SuperFreeze functions with automatic deactiviation

Food freshness system
- multiAirflow cooling - improves circulation of air around the fridge
- Vario Zone - removable safety glass shelves for extra space!
- 5 transparent freezer drawers, 2 bigbox
- 1 ice cube tray

Dimension and installation
- Dimensions: 186 cm H x 60 cm W x 65 cm D

Key features - Fridge section
- Right hinged door, reversible door
- Height adjustable front feet
- Door opening: No side clearance needed at all. Full access to all drawers, door opening angle 90°.
- 220 - 240 V

Key features - Feezer section
- ice cube tray, cold accumulator

Country Specific Options
- Based on the results of the standard 24-hour test. Actual consumption depends on usage/position of the appliance.
- To achieve the declared energy consumption, the attached distanceholders have to be used. As a result, the appliance depth increases by about 3.5 cm. The appliance used without the distance holder is fully functional, but has a slightly higher energy consumption.

Included accessories

Design features

Dimension and installation

Additional features

Performance and Consumption
- EU19_EEK_D: F
- Total Volume : 242 l
- Net Fridge Volume : 0 l
- Net Freezer Volume : 242 l
- Freezing capacity 24h : 19 kg
- Annual Energy Consumption: 294 kWh/a
- Climate Class: SN-T
- EU19_Fast freezer facility_D: yes
- Noise Level : 39 dB
- Temperature rise time : EU19_Temperature rise time_D: 9 H

SIEMENS

IQ300, free-standing freezer, 186 x 60 cm, Inox-easyclean GS36NVIFV

Dimensioned drawings

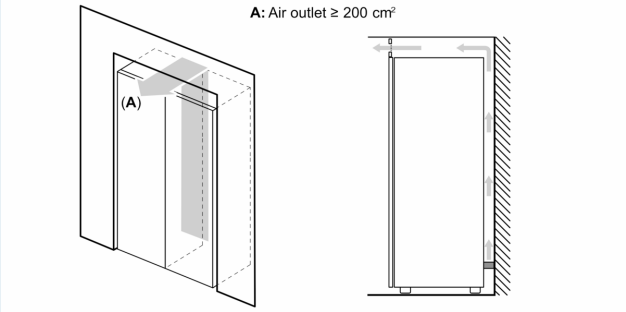

	a	b	c	d	e	f
KSW36, GSD36	187	60	65	58	60	119.5
KSV36, KSF36, GSN36, GSV36	186					
KSV33, GSN33, GSV33	176					
KSV29, GSN29, GSV29	161					
GSV24	146					
GSN51	161	70	78	70	70	142
GSN54	176					
GSN58	191					

a Height
b Width
c Depth with closed door w/o handle and w/o distance part
d Depth of cabinet w/o distance part
e Width with open door w/o handle
f Depth with open door w/o handle w/o distance part

measurements in cm

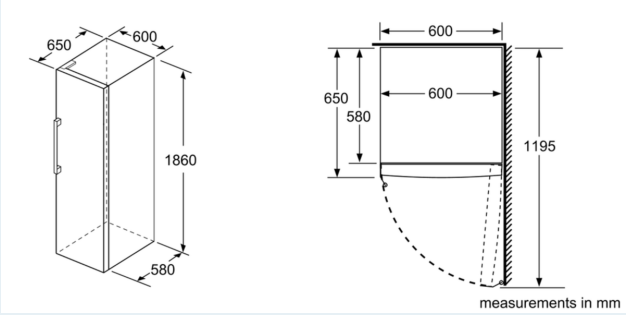

measurements in mm

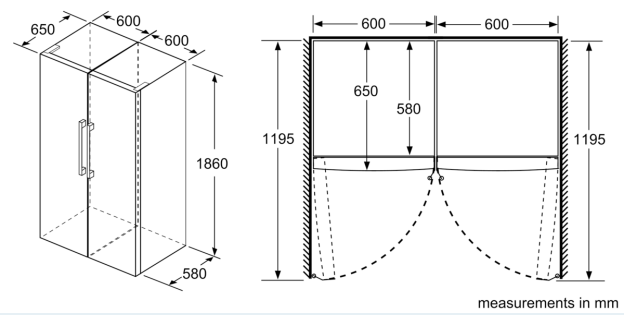

measurements in mm