IQ500, Modular Teppan yaki, 40 cm
ET475FYB1E

Very fast heating and great for flash-frying, the Teppan yaki is design for traditional Japanese cooking at home.

- ✓ The 40 cm wide teppanyaki is ideal for combining with other Domino or faceted design cooktops to create a bespoke cooking area.
- ✓ Depending on the requirements and quantities the two cooking zones can be heated together or seperately.
- ✓ The touchSlider allows the hob temperature to be controlled by entering it directly or by moving the slider with a single finger.
- ✓ Easily keeps all dishes at a warm 70°C.
- ✓ Heats to 40°C so that grease deposits can be removed more easily.

2 x spatula

HZ32WA00	Wireless food thermometer
HZ394301	Connecting strip

Product name/family:	Vario/Domino Teppan Yaki
Built-in / Free-standing:	Built-in
Energy input:	Electric
Type of control:	Electronic
Grill grating material:	Not applicable
Min. required niche size for installation (HxWxD):	90 x x mm
Width of the appliance:	392 mm
Dimensions:	90x392x520 mm
Dimensions of the packed product (HxWxD):	240 x 480 x 610 mm
Weight:	10.2 kg
Gross weight:	12.3 kg
Residual heat indicator:	Separate
Location of control panel:	Front
Basic surface material:	Not applicable
Color of surface:	Stainless steel, Alu, brushed
Length electrical supply cord:	100.0 cm
EAN code:	4242003689127
Fuse protection:	13 A
Nominal power:	220-240 V
Frequency:	50; 60 Hz
Included accessories:	2 x spatula

4 242003 689127

SIEMENS

IQ500, Modular Teppan yaki, 40 cm
ET475FYB1E

Measurements in mm

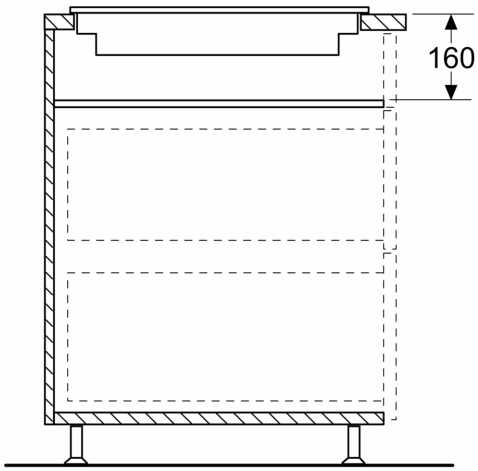

An intermediate floor must be installed below the appliance in accordance with the installation drawing

Measurements in mm

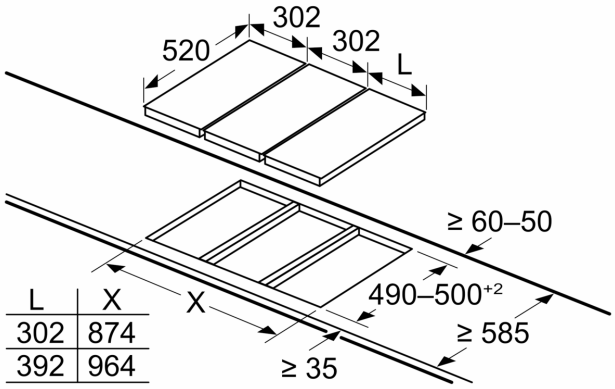

L	X
302	874
392	964

If two or more elements are installed right next to one another, one or several installation kits are required (2 elements 1 installation kit, 3 elements 2 installation kits, etc.)

measurements in mm

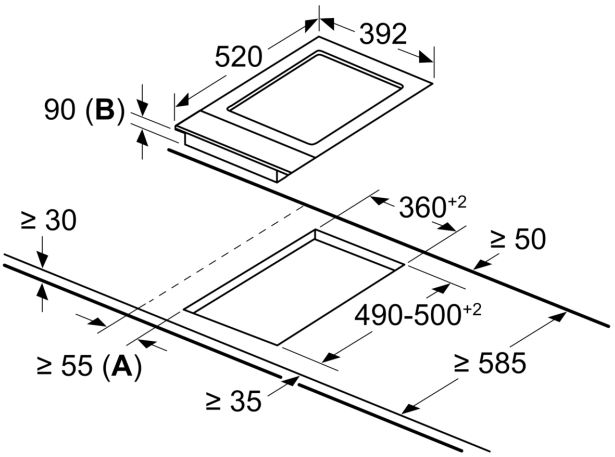

A: Minimum distance from the hob cut-out to the wall
B: Maximum recessed depth

Measurements in mm

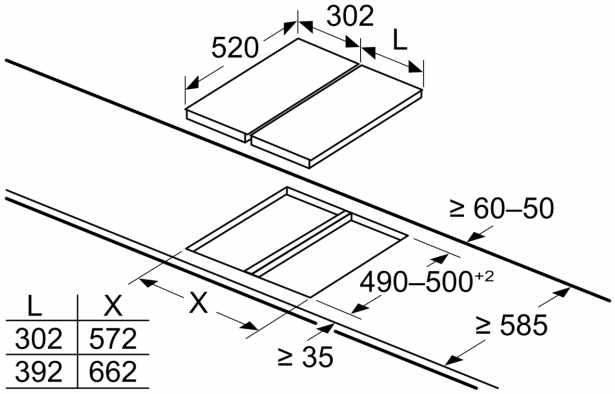

L	X
302	572
392	662

If two or more elements are installed right next to one another, one or several installation kits are required (2 elements 1 installation kit, 3 elements 2 installation kits, etc.)

Measurements in mm

Assembly kit (HZ394301) for Domino

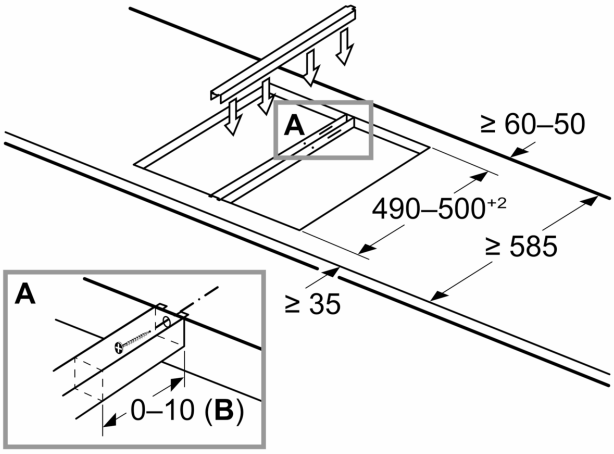

B: Dependent on the cut-out depth

Measurements in mm
Picture for the table Domino combination possibilities with corresponding devices and cutout dimensions

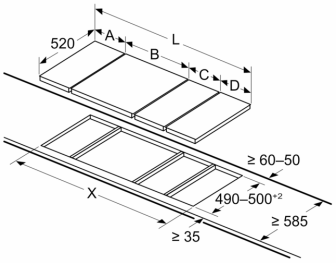

If two or more elements are installed right next to one another, one or several installation kits are required (2 elements 1 installation kit, 3 elements 2 installation kits, etc.)

Cutout dimension (X) depending on the combination (see combination table)

measurements in mm
Domino combination options with corresponding appliance and cut-out dimensions

Width category:	30	40	60	70	80	90
Appliance width:	302	392	602	710	812	912

	A	B	C	D	L	X
2x30	302	302	-	-	604	**572**
1x30, 1x40	302	392	-	-	694	**662**
1x30, 1x60	302	602	-	-	904	**872**
1x30, 1x70*	302	710	-	-	1012	**980**
1x30, 1x80	302	812	-	-	1114	**1082**
1x30, 1x90	302	912	-	-	1214	**1182**
2x40	392	392	-	-	784	**752**
1x40, 1x60	392	602	-	-	994	**962**
1x40, 1x70*	392	710	-	-	1102	**1070**
1x40, 1x80	392	812	-	-	1204	**1172**
1x40, 1x90	392	912	-	-	1304	**1272**
3x30	302	302	302	-	906	**874**
2x30, 1x40	302	302	392	-	996	**964**
2x30, 1x60	302	302	602	-	1206	**1174**
2x30, 1x70*	302	302	710	-	1314	**1282**
2x30, 1x80	302	302	812	-	1416	**1384**
2x30, 1x90	302	302	912	-	1516	**1484**
1x30, 2x40	302	392	392	-	1086	**1054**
1x30, 1x40, 1x60	302	392	602	-	1296	**1264**
1x30, 1x40, 1x70*	302	392	710	-	1404	**1372**
1x30, 1x40, 1x80	302	392	812	-	1506	**1474**
1x30, 1x40, 1x90	302	392	912	-	1606	**1574**
3x40	392	392	392	-	1176	**1144**
2x40, 1x60	392	392	602	-	1386	**1354**
4x30	302	302	302	302	1208	**1176**
3x30, 1x40	302	302	302	392	1298	**1266**
2x30, 2x40	302	302	392	392	1388	**1356**
1x30, 3x40	302	392	392	392	1478	**1446**
1x30, 1x75	302	750	-	-	1052	**1016**
1x40, 1x75	392	750	-	-	1142	**1106**
2x30, 1x75	302	302	750	-	1354	**1318**
1x30, 1x40, 1x75	302	392	750	-	1444	**1408**

* Not possible with 70 cm induction hob