SIEMENS

IQ300, Induction hob, 90 cm, Black, EH975LVC1E

HZ32WA00 Wireless food thermometer, HZ390090 Wok Set consisting of 3 Items, HZ390210 System pan diameter 15 cm, HZ390220 System pan diameter 19 cm, HZ390230 System pan diameter 21cm, HZ390240 Paella pan Ø 31 cm, HZ390250 System pan diameter 28 cm, HZ394301 Connecting strip, HZ9CF240 Fry pan, coated 24cm Ø, HZ9CF280 Fry pan, coated 28cm Ø, HZ9ES100 Espresso maker 4 cups, HZ9FE280 Iron pan Ø 18 / 28 cm, HZ9SE030 Set of 2 pots and 1 pan, HZ9SE040 4 pieces Set, HZ9SE060 6 pieces Set

- ✓ Dual light slider – Just touch and slide to control your hob.
- ✓ fryingSensor Plus – No more burning or scorching your meals.
- ✓ powerBoost – Increases the power of an induction zone by up to 50%.
- ✓ Safely shuts off the cooking zone - Timer with switch-off function.
- ✓ More energy efficient cooking thanks to the Energy Consumption Display.

Product name/family:	Cooking zone ceramic
Built-in / Free-standing:	Built-in
Energy input:	Electric
Number of cooking zones:	5
Min. required niche size for installation (HxWxD):	51 x 880-880 x 490-500 mm
Width of the appliance:	912 mm
Dimensions:	51x912x520 mm
Dimensions of the packed product (HxWxD):	126 x 1073 x 603 mm
Weight:	18.7 kg
Gross weight:	22.4 kg
Residual heat indicator:	Separate
Location of control panel:	Front
Basic surface material:	Ceramic
Color of surface:	Black, Alu, brushed
Length electrical supply cord:	110.0 cm
EAN code:	4242003698273
Nominal power:	220-240 V
Frequency:	60; 50 Hz

4 242003 698273

SIEMENS

IQ300, Induction hob, 90 cm, Black, EH975LVC1E

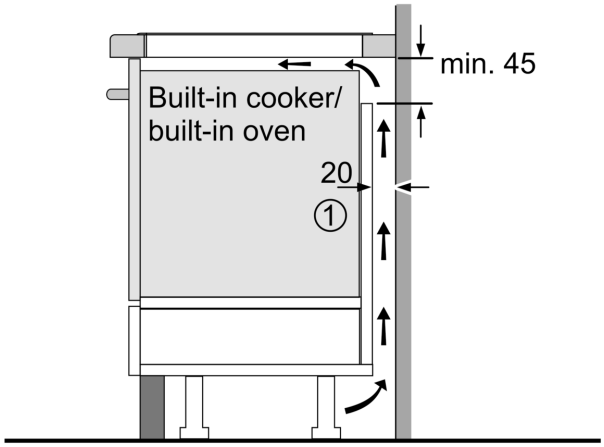

① Ventilation gap must be present

All measurements in mm

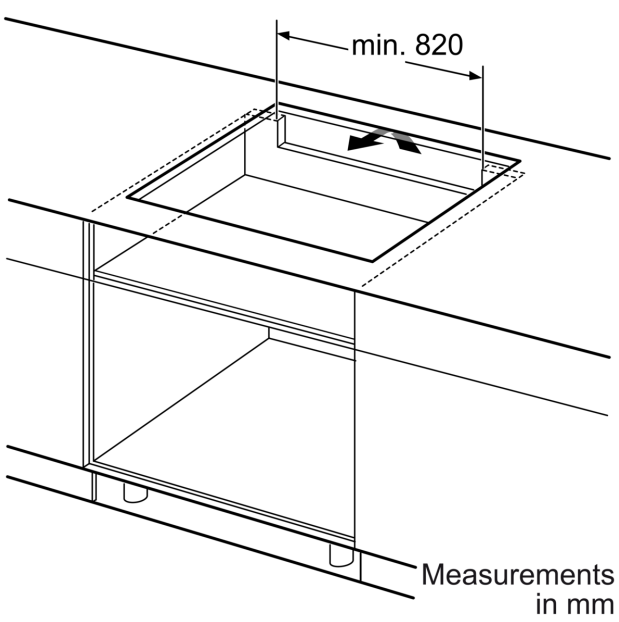

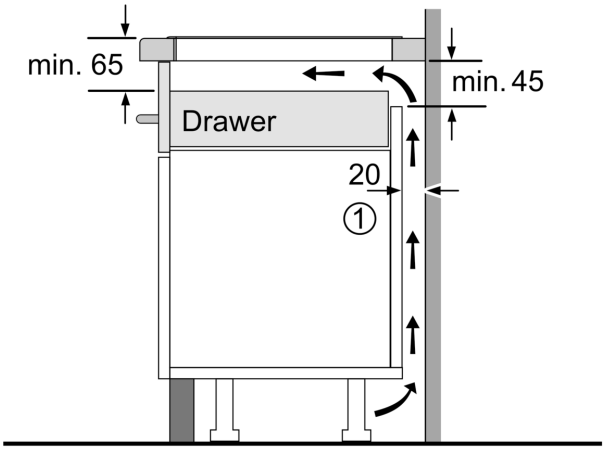

① Ventilation gap must be present.

Measurements in mm

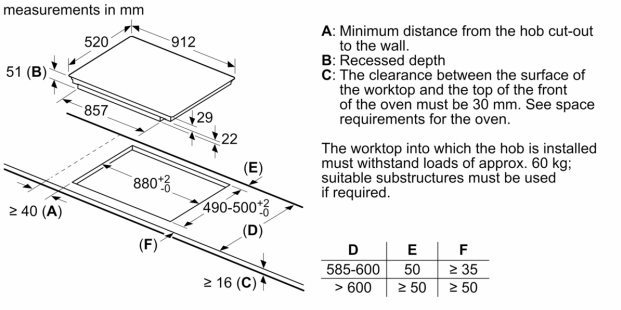

A: Minimum distance from the hob cut-out to the wall.
B: Recessed depth
C: The clearance between the surface of the worktop and the top of the front of the oven must be 30 mm. See space requirements for the oven.

The worktop into which the hob is installed must withstand loads of approx. 60 kg; suitable substructures must be used if required.

D	E	F
585-600	50	≥ 35
> 600	≥ 50	≥ 50