SIEMENS

# IQ500, Gas hob, 60 cm, Stainless steel
# EC6A5PB90

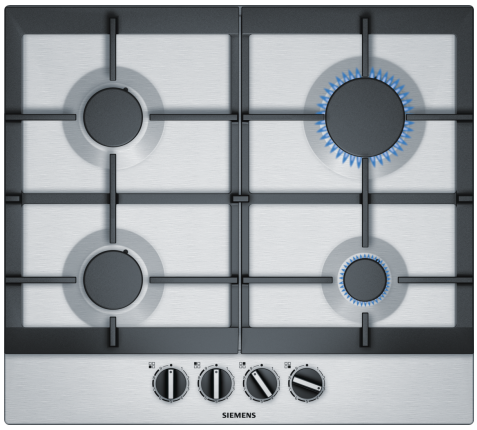

| | |
|---|---|
| HZ211310 | Simmer cap |
| HZ241110 | Small pot support |
| HZ298105 | Simmer plate |

**The gas hob with stepFlame Technology for precise flame control in nine steps.**

- ✓ stepFlame Technology – Precise flame control with nine different settings.
- ✓ High-quality materials and workmanship – continuous cast-iron pan supports.
- ✓ The extremely convenient sword knob makes it easy to control and monitor the power level selected.
- ✓ The uniquely beautiful stainless-steel surface design.

Product name/family: ..... gas hob w integrated controls
Built-in / Free-standing: ..... Built-in
Energy input: ..... Gas
Number of cooking zones: ..... 4
Type of control setting devices: .....sword knobs
Min. required niche size for installation (HxWxD): ....45 x 560-562 x 480-492 mm
Width of the appliance: ..... 582 mm
Dimensions: ..... 53x582x520 mm
Dimensions of the packed product (HxWxD): ... 141 x 651 x 578 mm
Weight: ..... 11.4 kg
Gross weight: ..... 12.2 kg
Residual heat indicator: .....without
Location of control panel: ..... Front
Basic surface material: ..... Stainless steel
Color of surface: ..... Stainless steel
Length electrical supply cord: ..... 100.0 cm
EAN code: .....4242003742044
Gas connection rating: ..... 7500 W
Fuse protection: .....3 A
Nominal power: .....220-240 V
Frequency: .....60; 50 Hz

4 242003 742044

SIEMENS

# IQ500, Gas hob, 60 cm, Stainless steel
# EC6A5PB90

**Design**
- Stainless steel surface
- Cast iron pan supports

**Usage convenience**
- Step Flame technology - 9 steps: precisely control and adjust the flame in nine defined levels.
- Design co-ordinated control dials: easily access dials in front with strong grip for effortless turning.
- Ignition via control dials: just push and turn the dials to ignite the flame.

**Burners and power**
- 4 burner gas hob including:
- Left front: Standard burner up to 1.75 KW (depending on gas type)
- Left rear: Standard burner up to 1.75 KW (depending on gas type)
- Right rear: High-speed burner up to 3 KW (depending on gas type)
- Right front: Economy burner up to 1 KW (depending on gas type)

**Safety**
- Flame failure safety device: prevents unwanted gas flow when flame goes out.

**Installation (gas types & measurements)**
- Usable for: Nat gas L/LL G25/20mbar(DE)
- NG H/E 20mbar, E+ 20/25mbar Natural gas H 25 mbar (HU) Natural gas L 25 mbar (NL) Liquid gas G30,31 28-30/37mbar Liquid gas G30 37 mbar (PL) Liquid gas 50 mbar
- Factory set for connection to mains gas
- Nozzle set for LPG jets (28-30/37mbar) included. Nozzles for all other gas types can be ordered via the customer service. For nozzle change, please contact the customer service.
- Dimensions of the product (HxWxD mm): 53 x 582 x 520
- Required niche size for installation (HxWxD mm) : 45 x 560 x (480 - 492)
- Min. worktop thickness: 30 mm
- Power cord: 1 m
- Connected load: 7.5 KW

SIEMENS
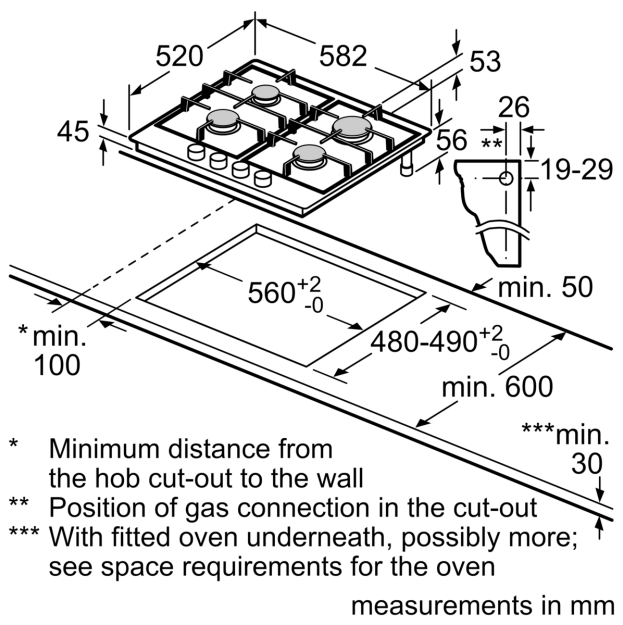
# IQ500, Gas hob, 60 cm, Stainless steel
# EC6A5PB90