Series 8, Warming drawer, 60 x 29 cm, Stainless steel
BID630NS1B

HEZ6WCC0 Cookbook

- **Push-pull mechanism**: easy opening and closing thanks to a clever spring mechanism.
- **Cleaning convenience**: Easy to clean hotplate made of tempered glass.

Built-in / Free-standing: ..... Built-in
Maximum number of plates: 40
Maximum number of espresso cups: 192
Dimensions: ..... 290x594x548 mm
Dimensions of the packed product (HxWxD): ..... 350 x 650 x 660 mm
Min. required niche size for installation (HxWxD): ....290 x 560 x 550 mm
EAN code: 4242002813936
Fuse protection: .....10 A
Voltage: .....220-240 V
Frequency: ..... 60; 50 Hz
Plug type: .....GB plug

4 242002 813936

Series 8, Warming drawer, 60 x 29 cm, Stainless steel
BID630NS1B

Design

- Push-pull opening mechanism
- Easy to clean toughened glass heating plate
- Can accommodate up to:
- -40plates
- -192 espresso cups
- Rotary dial
- Temperature control in 4 levels: ca. 30°C - 80°C (glass surface temperature)

Programmes/functions

- 5 functions: dough proving thawing of delicate foods keeping drinks and food warm pre-warming of crockery gentle cooking

Performance/technical information

- Cavity volume: 52 l
- Loading up to 25 kg
- 150 cm Cable Cable length
- Total connected load electric: 0.81 KW
- Nominal voltage: 220 - 240 V
- Appliance dimension (hxwxd): 290 mm x 594 mm x 548 mm
- Niche dimension (hxwxd): 290 mm x 560 mm - 568 mm x 550 mm
- Please refer to the dimensions provided in the installation manual

Series 8, Warming drawer, 60 x 29 cm, Stainless steel
BID630NS1B

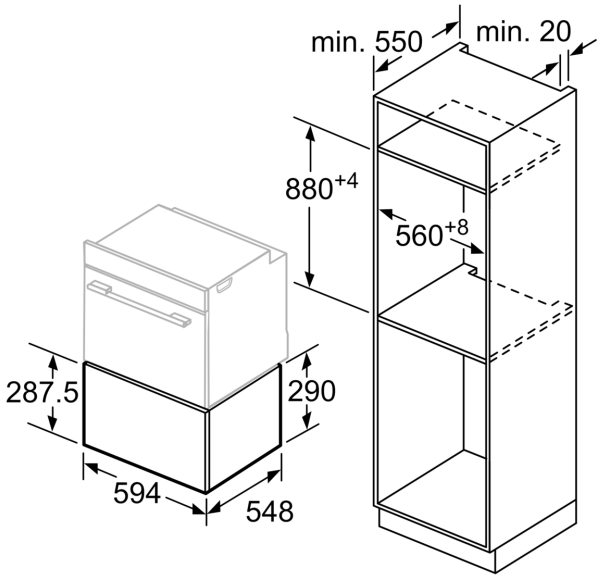

measurements in mm

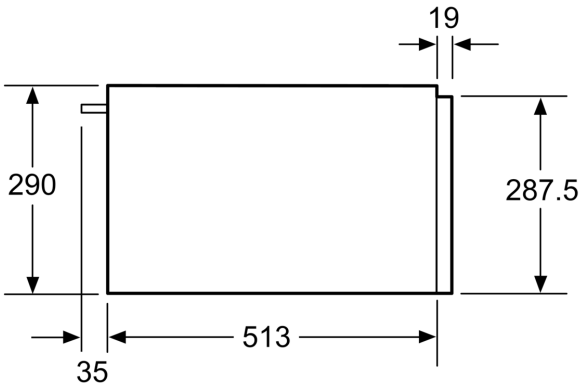

Ovens with an appliance height of 595 mm can be installed above a warming drawer. An intermediate floor is not required.

measurements in mm