SIEMENS

iQ300, condenser tumble dryer, 7 kg, White
WT46E381GB









iQ 300 condenser dryer with sensor-controlled autoDry technology for preventing laundry shrinkage and a display with time-remaining indicator.

- ✓ Sensor-controlled autoDry technology delivers perfectly dried laundry.
- ✓ Special drying programme for functional textiles such as sportswear and outdoor clothing.
- ✓ 40 minute quick dry programme (Rapid 40).
- ✓ softDry drum system for extremely gentle drying

Features

Technical Data

Built-in / Free-standing:	Freestanding
Removable top:	Yes
Door opening:	Right
Length electrical supply cord:	145.0 cm
Dimensions:	842x598x639 mm
Weight:	43.0 kg
EAN code:	4242003643174
Connection Rating:	2600 W
Fuse protection:	13 A
Nominal power:	220-240 V
Frequency:	50 Hz

4 242003 643174

Optional accessories

WZ20290	Cover plate
WZ20310	Stacking kit
WZ20500	Platform with pull-out

[1] Scale of Energy Efficiency Classes from A to G

SIEMENS

iQ300, condenser tumble dryer, 7 kg, White
WT46E381GB

Features

Performance
- Energy Efficiency Class: B at a range of energy efficiency classes from A+++ to D
- Capacity: 7 kg
- Energy consumption 504.0 kWh per year, based on 160 drying cycles of the standard cotton programme at full and partial load, and the consumption of the low-power modes. Actual energy consumption per cycle will depend on how the appliance is used
- Energy consumption of the standard cotton programme at full load 4.2 kWh and energy consumption of the standard cotton programme at half load 2.3 kWh
- The programme Cotton cupboard dry used at full and partial load is the standard drying programme to which the information in the label and the fiche relates, this programme is suitable for drying normal wet cotton laundry and is the most efficient programme in terms of energy consumption for cotton.
- Programme time of the standard cotton programme at full load 124 min and programme time of the standard cotton programme at partial load 76 min.
- Weighted programme time of the standard cotton programme at full and partial load: 97 min.
- Condensation efficiency class B on a scale from G (least efficient) to A (most efficient).
- Weighted condensation efficiency for the standard cotton programme at full and partial load: 89 %.
- Average condensation efficiency of the standard cotton programme at full load 89 % and average condensation efficiency of the standard cotton programme at partial load 89 %.
- Power consumption in off-mode 0.1 W and in left-on mode 1 W
- Duration of left-on mode: 0 min
- Noise level: 64 dB (A) re 1 pW

Programmes/functions
- Fully electronic control dial for sensor drying, including timed and special programmes
- Special programmes: Woollens Finish, outdoor, lingerie, 20 minute warm, rapid 40
- Touch control buttons: start/stop, low heat, less ironing, time delay

Key features
- Sensitive drying: large softDry stainless steel drum system and revolution drying system
- AntiVibration design: for greater stability and quietness

Additional features
- LC Display for time remaining and 24 hours time delay
- LED programme progress indicator and warning for fluff filter
- Anti crease cycle 120 minutes at the end of the programme
- Container for condensed water
- End of cycle buzzer
- Metal door catch

Technical Information
- Dimensions (H X W X D): 84.2 x 59.8 x 63.9 cm
- Can be built-under
- Round glass door silver-white

SIEMENS

iQ300, condenser tumble dryer, 7 kg, White
WT46E381GB

Dimensioned drawings

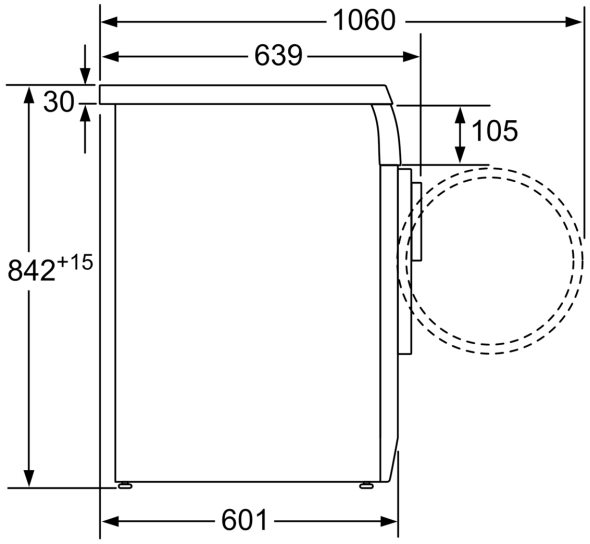

measurements in mm

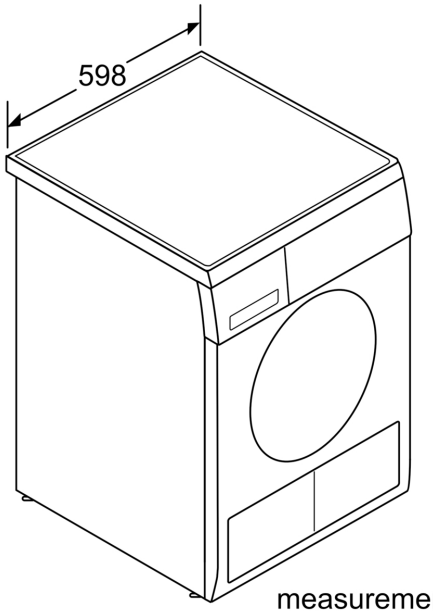

measurements in mm

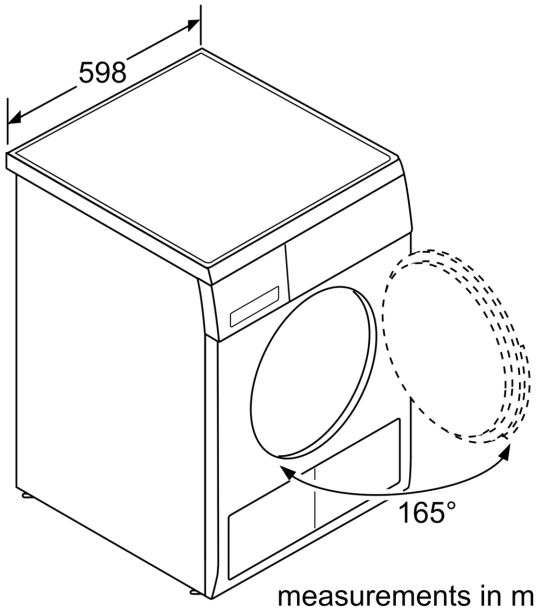

measurements in mm