SIEMENS

iQ500, Heat pump tumble dryer, 9 kg
WQ45G200GB







Optional accessories

WZ27400	Stacking kit with pull-out shelf
WZ27410	Stacking kit

Excellent drying performance with the selfCleaning condenser and autoDry for gentle and even drying of your laundry.

- ✓ Energy label A+++ energy-efficient drying,
- ✓ selfCleaning condenser: Automatically cleans the condenser to ensure excellent drying results and help maintain constant energy consumption
- ✓ autoDry - Gently dries laundry to the selected degree of dryness.
- ✓ speedPack- Flexible speed solutions tailored to your schedule.
- ✓ Half load — shortens the cycle for smaller loads by estimating the programme's needs

Features

Technical Data

Removable top: ..... No
Built-in / Free-standing: ..... Freestanding
Door opening: ..... Right
Length electrical supply cord: ..... 180 cm
Dimensions: ..... 842x598x613 mm
Weight: ..... 55.5 kg
Fluorinated greenhouse gases: R290
Hermetically sealed equipment: ..... Yes
EAN code: 4242003972731
Connection Rating: ..... 600 W
Fuse protection: ..... 10 A
Nominal power: ..... 220-240 V
Frequency: ..... 50 Hz
Capacity: ..... 9.0 kg
Energy efficiency rating: ..... A+++
Energy consumption electric dryer, full load - NEW (2010/30/EC): 1.60 kWh
Energy consumption electric dryer, partial load - NEW (2010/30/EC): ..... 0.89 kWh
Condensation efficiency class - NEW (2010/30/EC): ..... B
Average condensation efficiency full load (%): ..... 88 %
Average condensation efficiency partial load (%): ..... 88 %

4 242003 972731

SIEMENS

iQ500, Heat pump tumble dryer, 9 kg
WQ45G200GB

Features

Performance
- Energy²: 110 kWh

Programmes/functions
- Standard programmes: cotton, easy care
- Bed Linen Program: reduces tangling of big items thanks to reversible drum
- Special programmes: cotton, shirts, Cotton Eco, lingerie, towels, pillows, mixed fabrics, outdoor, rapid 40, easy-care, wool drying in basket, timed programmme warm

Key features
- Anti crease cycle 120 min at the end of the programme
- Half Load option: optimises drying for smaller loads
- Touch control buttons: Iron dry, Cupboard dry, Cupboard dry+, end time delay, less ironing, low heat, buzzer, Start / Reload / Pause, 24 h end time delay

Additional features
- SC1R
- Speed
- Fully electronic control dial for sensor and timed programmes
- Large LED display for remaining time and 24 hours time delay, programme progress indication and special functions
- Load recommendation
- Usage meter: counts completed programmes
- soft dial
- Sensitive drying: large softDry stainless steel drum system and revolution drying system
- AntiVibration design: for greater stability and quietness
- Wool drying basket
- Drum interior light
- Container for condensed water
- Child lock
- End of cycle buzzer
- NewValue door with cover glass, Liquid-chrome matt, black
- Door hinge: right-hand
- Metal door catch

Technical Information
- Slide-under installation
- Dimensions (H x W): 84.2 cm x 59.8 cm
- Appliance depth: 61.3 cm
- Appliance depth incl. door: 64.8 cm
- Appliance depth with open door: 109.6 cm

SIEMENS

iQ500, Heat pump tumble dryer, 9 kg
WQ45G200GB

Dimensioned drawings

Measurements in mm

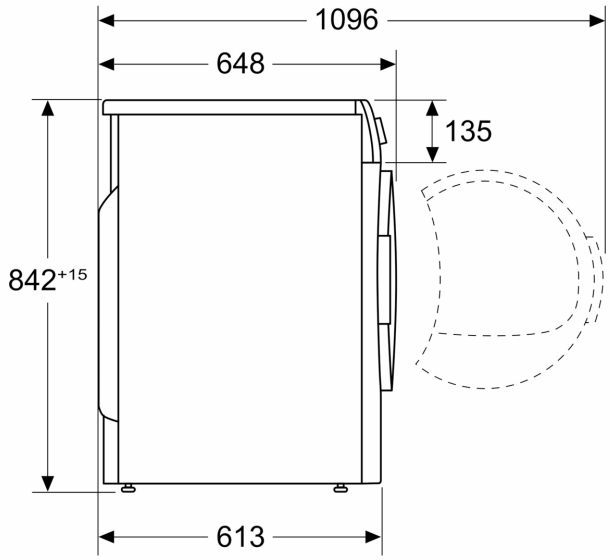

Measurements in mm

