VP414115

Included accessories

2 x spatula

installation accessories

CKP420000:
2 knobs, teppan yaki, black

CKP420010:
2 knobs, teppan yaki, stainless steel

VA420004:
Connecting strip Serie 400, flush, short

VA420010:
Connecting strip Serie 400, top, short

VA440010:
Appliance cover Vario 400 series

Vario Teppan Yaki 400 series
38 cm
VP414115

- Can be combined perfectly with other Vario appliances of the 400 series
- Open cast grill, lava stonesCooking directly on the hard-chromed metal surface, without any pots or pans

Exact temperature control up to 240 °C
Optimum heat distribution
Solid stainless steel knob, also selectable with black robust finishing, for precise control and personalisation
Precision crafting of 3 mm stainless steel
For surface installation with a visible edge or for flush installation
Can be combined perfectly with other Vario appliances of the 400 series

Cooking zones
Usable area W 31 x D 44 cm.

Handling
Control knobs with illuminated ring, cooking zone and temperature markings.
Electronic temperature control from 120 °C to 240 °C.

Features
Two zones, each 1500 W, can be operated together as a complete surface or each half separately.
Keeping warm setting.
Cleaning stage.
Even with traces of use, always easy to clean like a cast pan.

Safety
Safety shut-off.
Pre-heat and residual heat indicator.

Planning notes
Depending on the type of installation (surface-mounted or flush-mounted, with or without an appliance cover), the specific location of the cut-out and the knob positions may vary.
If combining several Vario appliances of the 400 series, a connection strip VA 420 must be placed between the appliances. Depending on the type of installation, the corresponding connection strip must be provided.
The bearing capacity and stability, in the case of thin worktops in particular, must be supported using suitable substructures. Take into account the appliance weight and additional loads.
Additional instructions for flush installation:
Installation is possible in worktops made of stone, synthetics or solid wood. Heat resistance and watertight sealing of the cut edges must be observed. Concerning other materials please consult the worktop manufacturer.
The groove must be continuous and even, so that uniform placing of the appliance on the gasket is ensured. Do not use discontinuous lining.
The joint width may vary due to size tolerances of the combinations and of the worktop cut-out.
If installing several appliances in individual cut-outs allow for a division bar of minimum 50 mm between the individual cut-outs.
A minimum lateral clearance of at least 40 mm from adjacent heat-sensitive furniture or contact surfaces must be observed or thermal insulation fitted.
Appliance can be snapped into the worktop from above.
Appliance weight: approx. 11.

Connection
Total connected load 3.0 KW.
Connecting cable 1.50 m without plug.

Installation of the control knob; flush installation

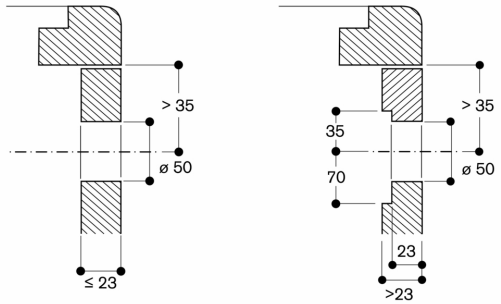

measurements in mm

Installation of the control knob; surface mounting

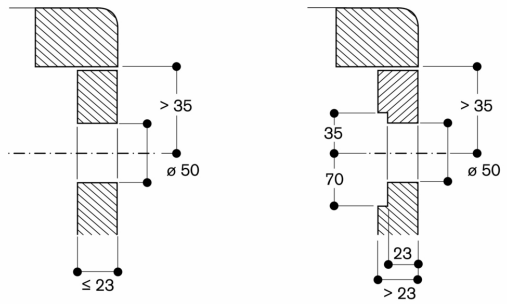

measurements in mm

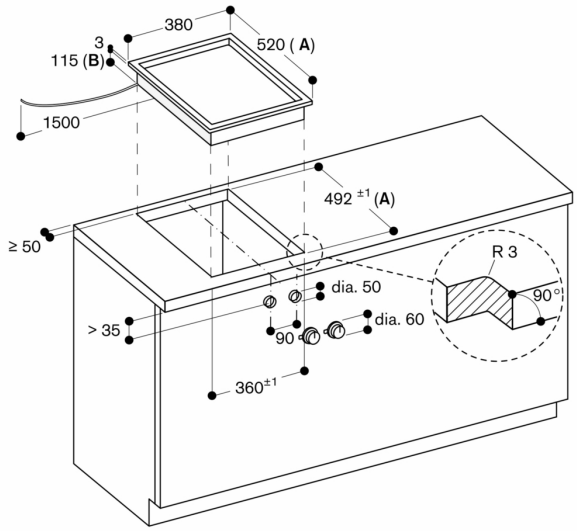

A: When installing with appliance cover, take the deeper cut-out into consideration (observe separate planning notes)
B: 130 mm in the area of the cable clamp (left, on the rear side)

measurements in mm

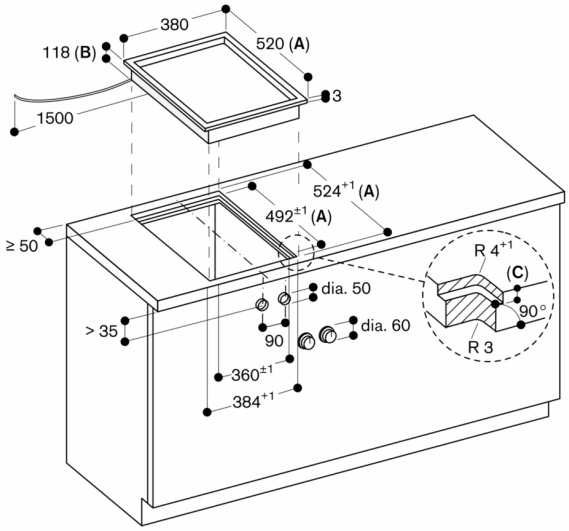

A: When installing with appliance cover, take the deeper cut-out into consideration (observe separate planning notes)
B: 133 mm in the area of the cable clamp (left, on the rear side)
C: $3.5^{-0.5}$
$6.5^{+0.5}$in combinations with frameless induction hobs

measurements in mm

Longitudinal section

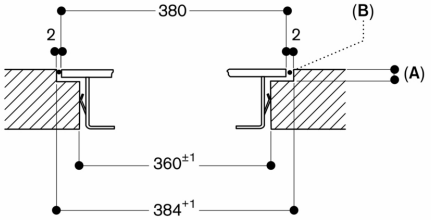

A: $3.5^{-0.5}$
$6.5^{+0.5}$in combinations with frameless induction hobs
B: Fill with silicone

measurements in mm

View from above

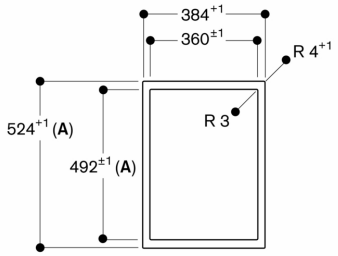

A: When installing with appliance cover, take the deeper cut-out into consideration (observe separate planning notes)

measurements in mm

Cross-section

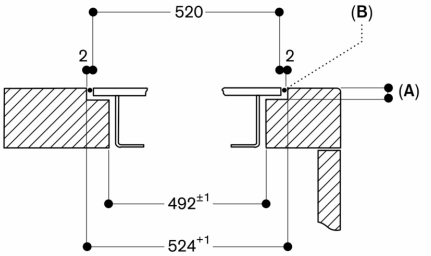

A: $3.5^{-0.5}$
$6.5^{+0.5}$in combinations with frameless induction hobs
B: Fill with silicone

When installing with appliance cover, pay attention to the deeper cut-out and the front and rear groove width.

measurements in mm

Installation with appliance cover, surface mounting

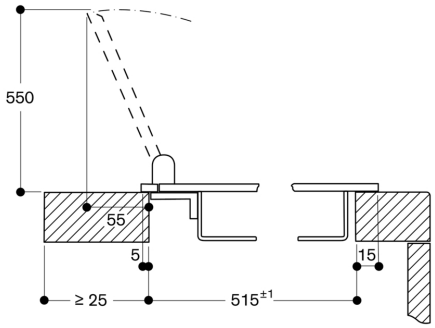

measurements in mm

Installation with appliance cover, flush mounting

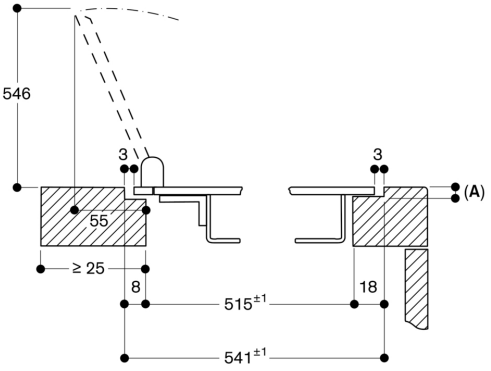

A: $3.5^{-0.5}$

measurements in mm

Installation with appliance cover, surface mounting

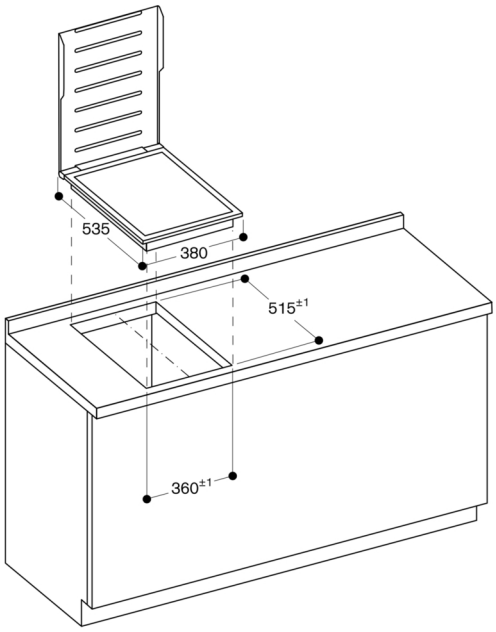

measurements in mm

Installation with appliance cover, flush mounting

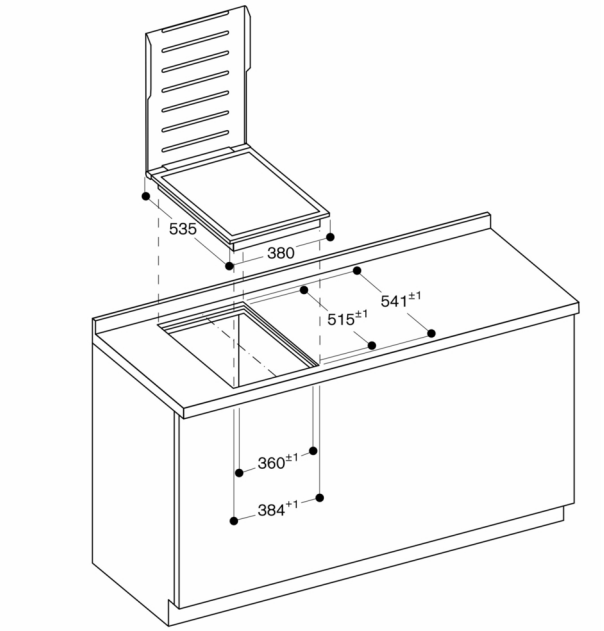

measurements in mm