VL414115

Optional accessories

AA414010:
400ser Air Duct Part

installation accessories

AD410040:
Flexibel connecting piece DN 150 flat

AD851041:
VL Connecting piece flat 150mm

CKV410000:
1 knob, ventilation, black

CKV410010:
1 knob, ventilation, stainless steel

VA420004:
Connecting strip Serie 400, flush, short

VA420010:
Connecting strip Serie 400, top, short

Vario downdraft ventilation 400 series
15 cm, stainless steel
VL414115

- Highly efficient ventilation
- The power levels are regulated automatically
- Advanced interior performance
- Can be combined perfectly with other Vario appliances of the 400 series
- For surface installation with a visible edge or for flush installationHighly efficient, low noise ventilation system especially with remote fan unit AR 410 110

Function for automatic, sensor-controlled power adjustment depending on the build-up of cooking vapours
Low planning and installation effort
Solid stainless steel knob, also selectable with black robust finishing, for precise control and personalisation
Precision crafting of 3 mm stainless steel
For surface installation with a visible edge or for flush installation
Can be combined perfectly with other Vario appliances of the 400 series

Output

Power levels depend on the remote fan unit.

Features

Control knobs with illuminated ring.
Three electronically controlled power levels and an intensive mode.
Automatic sensor-controlled performance adjustment of the ventilation system.
Automatic sensor-controlled or manual run-on function.
Large-scale metal grease filter with high grease absorption.
Removable, dishwasher-safe grease filter unit.
Grease filter and activated charcoal filter saturation indicator.
Airflow-optimised interior for efficient air circulation.
Interval ventilation, 6 min.
Enamelled ventilation grille, dishwasher-safe.
Air exhaust bend included in delivery.
Overflow 250 ml capacity.

Selected digital services (Gaggenau Home Connect)

Cooktop-based ventilation control (with suitable cooktop).
Remote control and monitoring.
Remote diagnostics.
Home network integration for digital services (Home Connect) either via cable connection LAN (recommended) or wireless via WiFi.
The availability of the Home Connect functionality depends on the availability of the Home Connect Services in your country. Home Connect Services are not available in every country – for further information please check: www.home-connect.com

Product rating

Consumption data is referred to a configuration with the remote fan unit AR 403 122.
Energy efficiency class A+ at a range of energy efficiency classes from A+++ to D.
Energy consumption 40.4 kWh/year.
Ventilation efficiency class A.
Illumination efficiency class -.
Grease filter efficiency class B.
Sound level min. 57 dB / max. 71 dB normal mode.

Planning notes

For each VL one remote fan unit is recommended.
Maximum cooktop(s) width between two VL : 80 cm except with the CX 482.
Vario cooktops like Vario electric grill and Vario gas wok should be placed between 2 VL.
For optimum performance in air recirculation we recommend an outflow surface area of at least 400 cm^2.
If operated next to gas appliances, the air baffle AA 414 010 is recommended to ensure maximum performance of the cooktop.
Appliance can be snapped into the worktop from above.
Depending on the type of installation (surface-mounted or flush-mounted), the specific location of the cut-out and the knob positions may vary.
If combining several Vario appliances of the 400 series, a connection strip VA 420 must be placed between the appliances. Depending on the type of installation, the corresponding connection strip must be provided.
The bearing capacity and stability, in the case of thin worktops in particular, must be supported using suitable substructures. Take into account the appliance weight and additional loads.
Additional instructions for flush installation:
Installation is possible in worktops made of stone, synthetics or solid wood. Heat resistance and watertight sealing of the cut edges must be observed. Concerning other materials please consult the worktop manufacturer.
The groove must be continuous and even, so that uniform placing of the appliance on the gasket is ensured. Do not use discontinuous lining.
The joint width may vary due to size tolerances of the combinations and of the worktop cut-out.
When installing a ventilation hood with air extraction mode and a chimney-vented fireplace, the hood's power supply line needs to feature a suitable safety switch.
Please read additional planning notes on page xx.

Connection

Total connected load 10 W.
Connecting cable 1.8 m with plug.
Plan a LAN cable.
Power consumption standby/display off 0.2 W.
Please check the user manual for how to switch off the WiFi module.

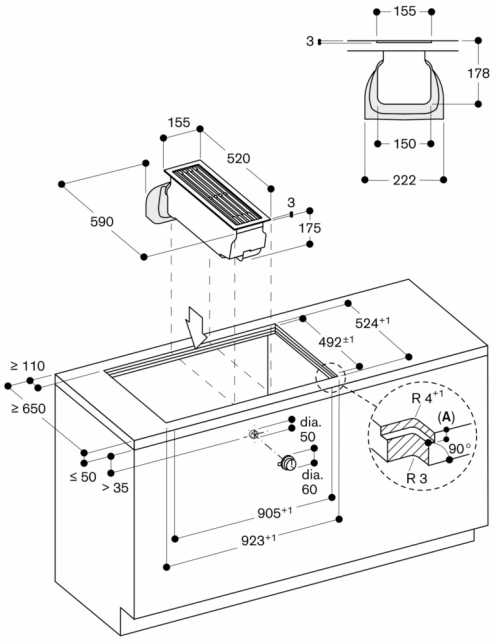

A: $3.5^{-0.5}$
$6.5^{+0.5}$ in combinations with frameless induction hobs

measurements in mm

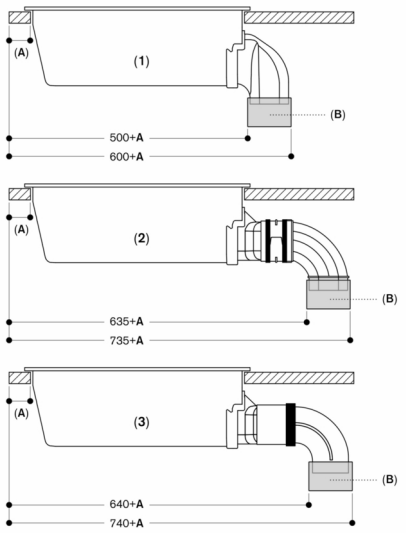

1: Direct installation
2: Installation with extension for extra deep worktop and plastic ducting:
– AD 851 041 (connecting piece for extension)
– AD 857 040 (flat duct connecting piece, plastic)
– AD 857 030 (flat duct bend, 90°, vertical, plastic)
3: Installation with extension for extra deep worktop and metal ducting:
– AD 851 041 (connecting piece for extension)
– AD 854 000 (flat duct connecting piece, metal)
– AD 854 030 (flat duct bend, 90°, vertical, metal)

A: ≥ 50mm
B: Connecting piece

measurements in mm

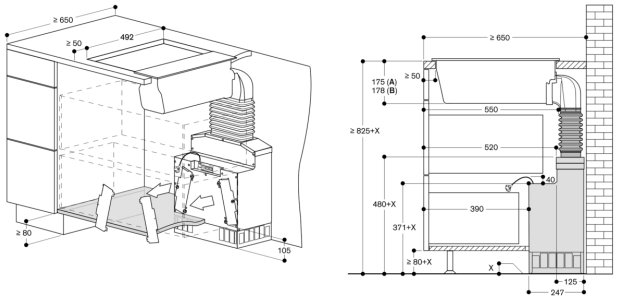

A: Surface mounting
B: Flush mounting (only VL414)

measurements in mm

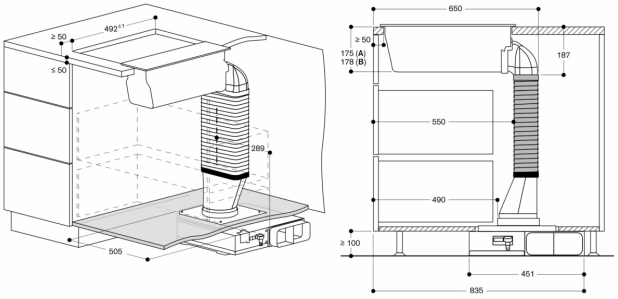

A: Surface mounting
B: Flush mounting (only VL414)

measurements in mm

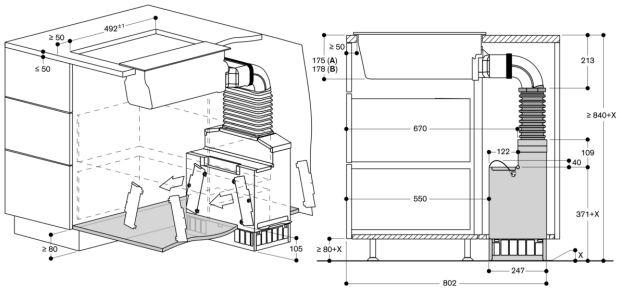

A: Surface mounting
B: Flush mounting (only VL414)

measurements in mm

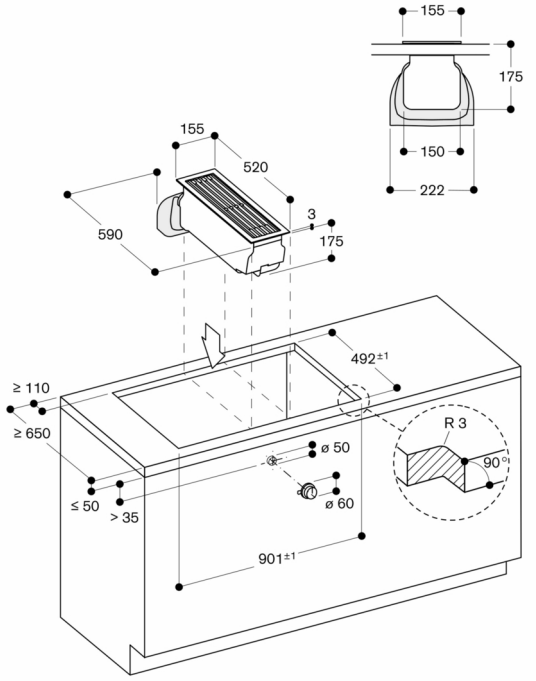

measurements in mm

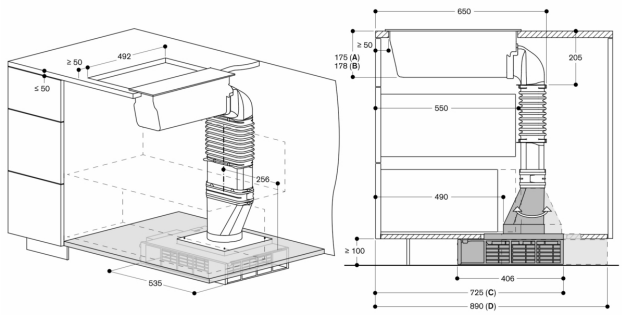

A: Surface mounting
B: Flush mounting (only VL 414)
C: Filter access from the front
Connecting piece flat/round towards the front
D: Filter access from the back
Connecting piece flat/round towards the back

Not recommended for non-thermally insulated floor (U ≥ 0.5 W/m²K)

Measurements in mm

Cross-section

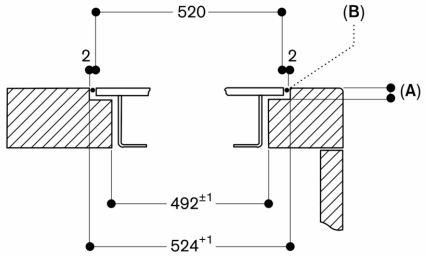

A: $3.5^{-0.5}$
B: Fill with silicone

measurements in mm

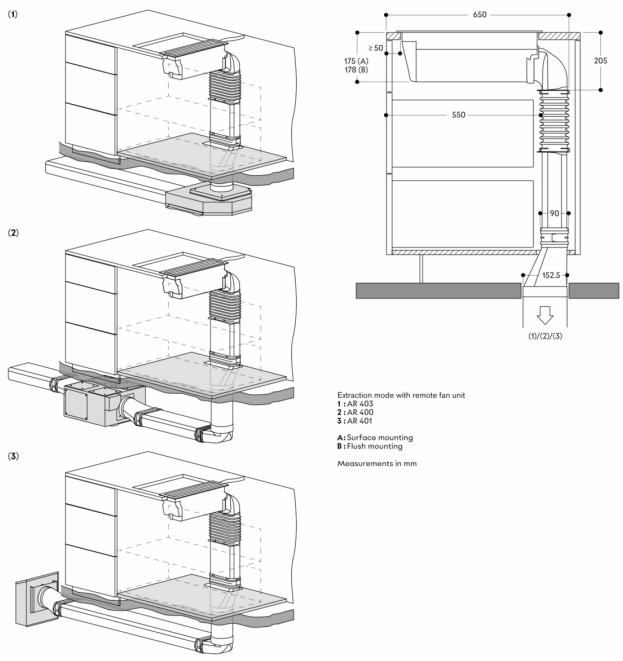

Extraction mode with remote fan unit
1 : AR 403
2 : AR 400
3 : AR 401

A: Surface mounting
B : Flush mounting

Measurements in mm

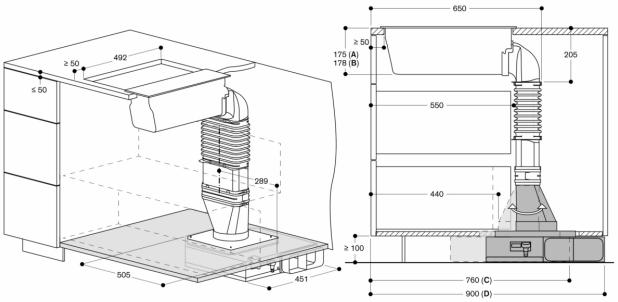

A: Surface mounting
B: Flush mounting (only VL414)
C: Exhaust to the left. Flat/round connecting piece towards the front
D: Exhaust to the right. Flat/round connecting piece towards the back

measurements in mm

Installation of the control knob; flush installation

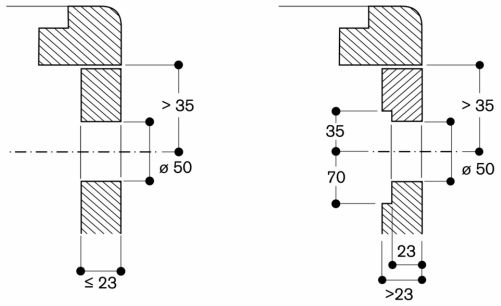

measurements in mm

Installation of the control knob; surface mounting

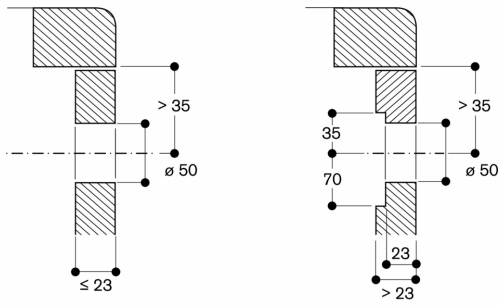

measurements in mm