VG425115F

installation accessories

CKG420000:
2 knobs, gas, black

CKG420010:
2 knobs, gas, stainless steel

VA420004:
Connecting strip Serie 400, flush, short

VA420010:
Connecting strip Serie 400, top, short

VA440010:
Appliance cover Vario 400 series

Vario gas cooktop 400 series
38 cm, Liquid gas 28-37 mbar
VG425115F

- Full electronic power level regulation on 12 levels
- Can be combined perfectly with other Vario appliances of the 400 series
- Multi-ring burner with up to 4 kWMulti-ring burner with up to 4 kW

Full electronic power level regulation on 12 levels
Solid stainless steel knob, also selectable with black robust finishing, for precise control and personalisation
Precision crafting of 3 mm stainless steel
For surface installation with a visible edge or for flush installation
Precise and reproducible flame size
Automatic fast ignition, electronic flame monitoring with automatic re-ignition
Simmer function for cooking on a very low output level
Solid smooth-surface cast pan supports
Can be combined perfectly with other Vario appliances of the 400 series

Cooking zones

1 two-ring high output burner (165 W – 4000 W), suitable for pots up to max. ø 28 cm.
1 two-ring standard output burner (165 W – 2000 W), suitable for pots up to max. ø 28 cm.

Handling

Control knobs with illuminated ring, cooking zone and output level markings.
One-handed operation.
Full electronic control in 12 output levels for exact power level adjustment plus simmer function.
Automatic fast ignition.

Features

Simmer function.
Cast pan support with flat, continuous pot surface.
Brass burner rings.

Safety

Electronic flame monitoring with automatic re-ignition.
Residual heat indication.
Safety shut-off.

Planning notes

Depending on the type of installation (surface-mounted or flush-mounted, with or without an appliance cover), the specific location of the cut-out and the knob positions may vary.
The drawing "Installation of the control knob" must be observed if the panel is more than 23 mm thick (there must be a recess at the rear).
If combining several Vario appliances of the 400 series, a connection strip VA 420 must be placed between the appliances. Depending on the type of installation, the corresponding connection strip must be provided.
The bearing capacity and stability, in the case of thin worktops in particular, must be supported using suitable substructures. Take into account the appliance weight and additional loads.

Additional instructions for flush installation:
Installation is possible in worktops made of stone, synthetics or solid wood. Heat resistance and watertight sealing of the cut edges must be observed. Concerning other materials please consult the worktop manufacturer.
The groove must be continuous and even, so that uniform placing of the appliance on the gasket is ensured. Do not use discontinuous lining.
The joint width may vary due to size tolerances of the combinations and of the worktop cut-out.
If installing several appliances in individual cut-outs allow for a division bar of minimum 50 mm between the individual cut-outs.
Special nozzles can be ordered as spare parts.
Plan for an electrical connection (the appliance is not operable without power supply).
Air intake from above.
No intermediate shelf required.
Rear panel and wall trims must be heat-resistant and consist of a non-flammable material.
A minimum clearance of at least 150 mm from adjacent heat-sensitive furniture or contact surfaces must be observed or thermal insulation fitted.
If operated next to the downdraft ventilation VL 414, the ventilation moulding AA 414 is recommended to ensure maximum performance of the cooktop.
With a total connected load of more than 11 kW local regulations concerning room ventilation, room size and combination of extraction or recirculation hoods must be observed.
The minimum distance between the cooktop surface and a cabinet above, out of combustible material, needs to be 70 cm.
The minimum distance to a ventilation above is shown at the planning hints for the individual ventilation product.
Appliance can be snapped into the worktop from above.
Appliance weight: approx. 13.

Connection

Total connected load gas 6.0 KW.
Total connected load electric 15.0 W.
Connecting cable 1.4 m with plug.

Installation of the control knob; flush installation

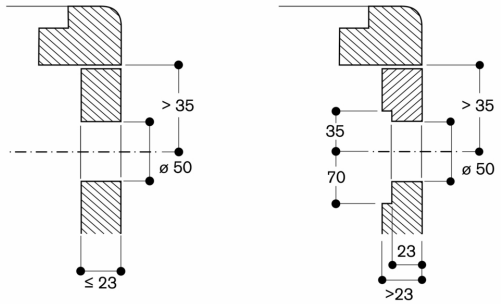

measurements in mm

Installation of the control knob; surface mounting

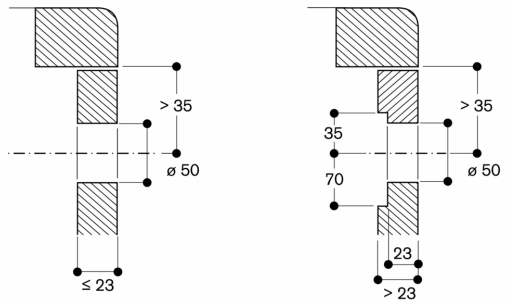

measurements in mm

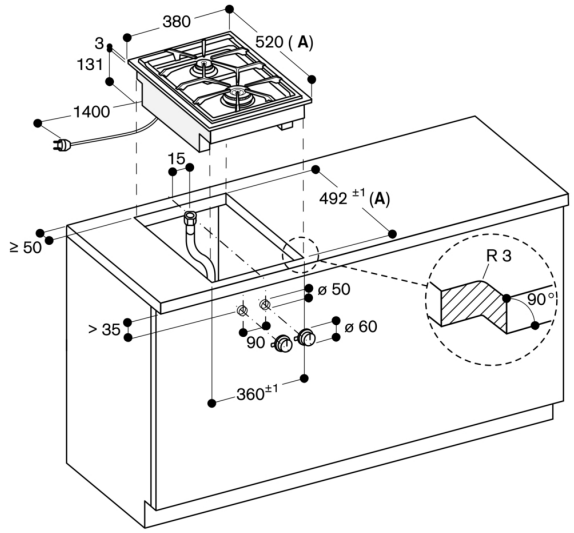

A: When installing with appliance cover, take the deeper cut-out into consideration (observe separate planning notes)

measurements in mm

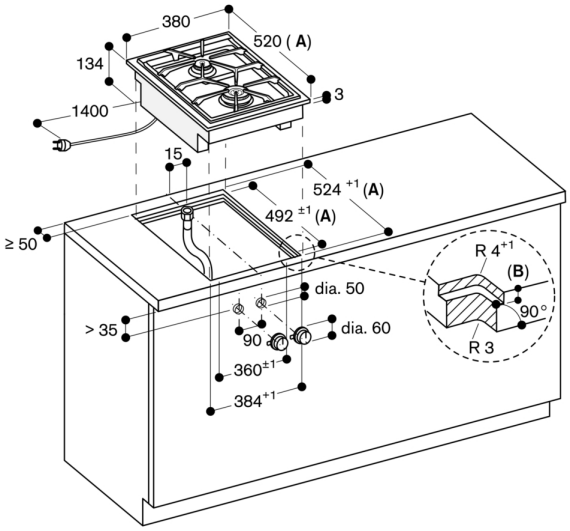

A: When installing with appliance cover, take the deeper cut-out into consideration (observe separate planning notes)
B: $3.5^{-0.5}$
$6.5^{+0.5}$in combinations with frameless induction hobs

measurements in mm

Longitudinal section

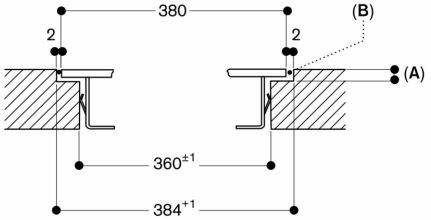

A: $3.5^{-0.5}$
$6.5^{+0.5}$in combinations with frameless induction hobs
B: Fill with silicone

measurements in mm

View from above

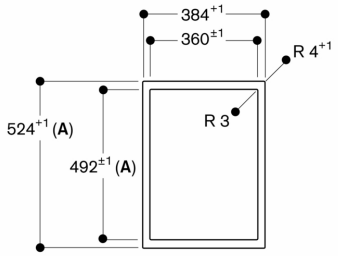

A: When installing with appliance cover, take the deeper cut-out into consideration (observe separate planning notes)

measurements in mm

Cross-section

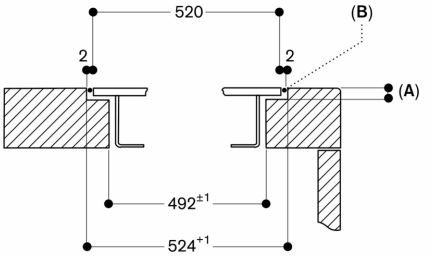

A: $3.5^{-0.5}$
$6.5^{+0.5}$in combinations with frameless induction hobs
B: Fill with silicone

When installing with appliance cover, pay attention to the deeper cut-out and the front and rear groove width.

measurements in mm

Installation with appliance cover, surface mounting

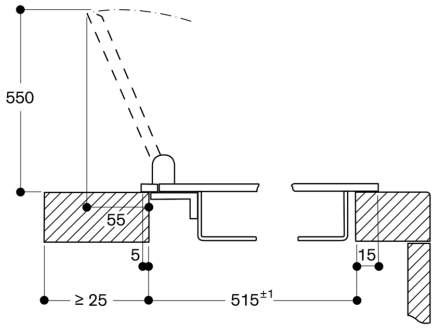

measurements in mm

Installation with appliance cover, flush mounting

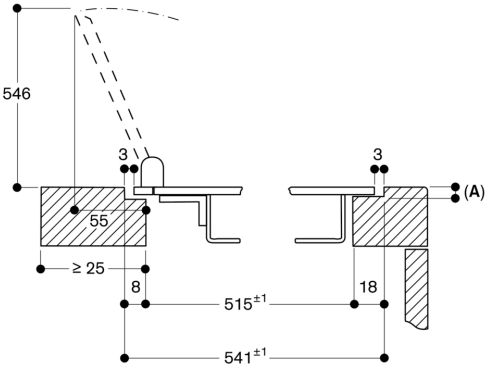

A: $3.5^{-0.5}$

measurements in mm

Installation with appliance cover, surface mounting

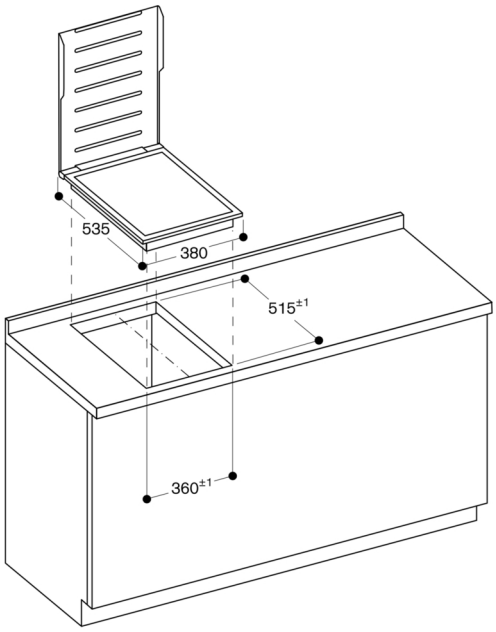

measurements in mm

Installation with appliance cover, flush mounting

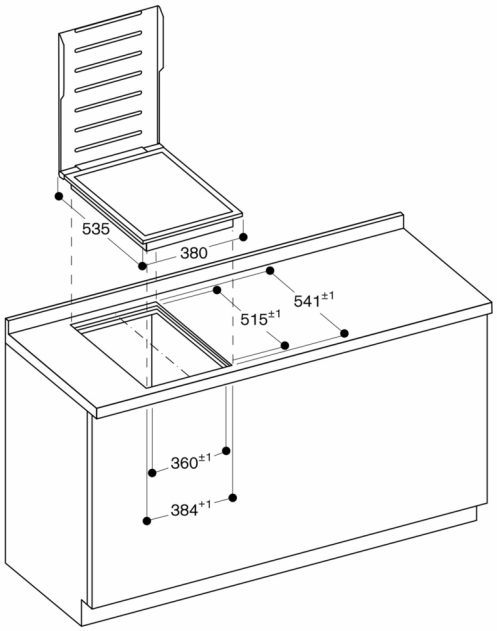

measurements in mm