VG295150F

Included accessories

1 x wok attachment ring

Optional accessories

WP400001:
Wok pan

Gas cooktop 200 series
90 cm, Liquid gas 28-37 mbar
VG295150F

- Mechanical power level regulation for 9 power levels, with exact setting and reproduction of flame size
- Control panel for comfortable and secure operation
- Solid smooth-surface cast pan supports
- Multi-ring burner of solid, heat-resistant brass as used in professional kitchen
- Precise and reproducible flame sizeControl panel for comfortable and secure operation

Mechanical power level regulation for 9 power levels, with exact setting and reproduction of flame size

Multi-ring burner of solid, heat-resistant brass as used in professional kitchen

Solid smooth-surface cast pan supports

Top appliance in the market, 17.8 kW on 5 burners

Cooking zones

1 multi-ring wok burner (300 W – 5800 W), suitable for pots up to max. ø 32 cm.

2 two-ring high output burners (170 W – 4000 W), suitable for pots up to max. ø 28 cm.

2 two-ring standard burners (170 W – 2000 W), suitable for pots up to max. ø 28 cm.

Handling

Control knobs with illuminated ring.

Integrated control panel.

One-handed operation.

Electric ignition.

Features

Three-part cast pan support with flat, continuous pot surface.

Brass burner rings.

Safety

Thermoelectric safety pilot.

Residual heat indication.

Operation indicator.

Planning notes

No intermediate shelf required.

Appliance can be snapped into the worktop from above.

Rear panel and wall trims must be heat-resistant and consist of a non-flammable material.

Installation in a 90 cm wide lower cabinet is required.

A minimum lateral clearance of at least 300 mm from adjacent heat-sensitive furniture or contact surfaces must be observed or thermal insulation fitted.

With a total connected load of more than 11 kW local regulations concerning room ventilation, room size and combination of extraction or recirculation hoods must be observed.

The minimum distance between the cooktop surface and a cabinet above, out of combustible material, needs to be 76 cm.

The minimum distance to a ventilation above is shown at the planning hints for the individual ventilation product.

Appliance weight: approx. 29.

Connection

Total connected load gas 17.8 KW.

Total connected load electric 10.0 W.

Connecting cable 1.5 m with plug.

Gas connection

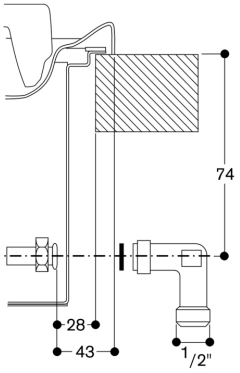

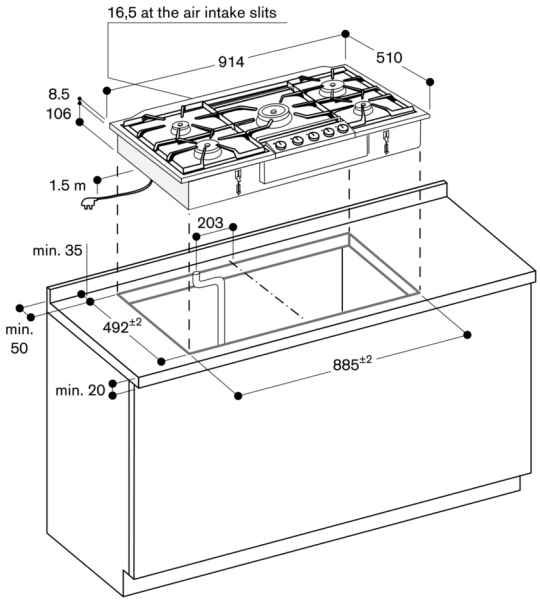

Minimum distance from the appliance cut-out to the side wall 300 mm.