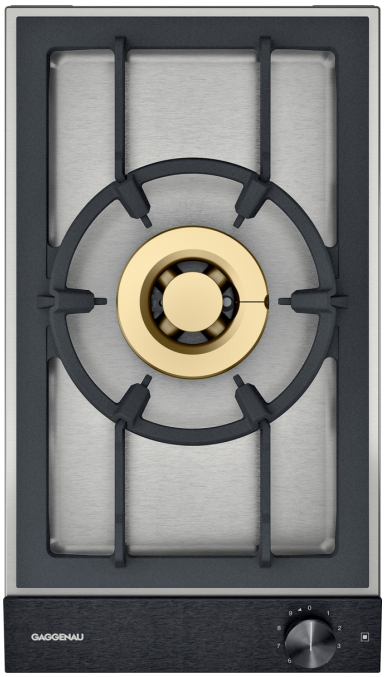

VG231220

Included accessories

1 x wok attachment ring

Optional accessories

VD200020:
Black cover series 200

WP400001:
Wok pan

installation accessories

VV200010:
Connecting strip series 200 ss

VV200020:
Connecting strip series 200 black

Vario gas cooktop 200 series
28 cm, Natural gas 20 mbar
VG231220

- Mechanical power level regulation for 9 power levels, with exact setting and reproduction of flame size
- Control panel for comfortable and secure operation
- Solid smooth-surface cast pan supports
- Multi-ring burner of solid, heat-resistant brass as used in professional kitchen
- Multi-ring burner with 6 KWCan be combined with the cooktops of the Vario 200 series to a harmonic unity.

Control panel for comfortable and secure operation

Mechanical power level regulation for 9 power levels, with exact setting and reproduction of flame size

Multi-ring burner of solid, heat-resistant brass as used in professional kitchen

Total output up to 6 KW

Cooking zones

1 multi-ring wok burner (300 W – 6000 W), suitable for pots up to max. ø 30 cm.

Handling

Control knobs with illuminated ring.

Integrated control panel.

One-handed operation.

Electric ignition.

To close the cover, the pan support can be easily reversed.

Features

Cast pan support.

Brass burner rings.

Safety

Thermoelectric safety pilot.

Residual heat indication.

Operation indicator.

Planning notes

Appliance can be snapped into the worktop from above.

A minimum clearance of at least 150 mm from adjacent heat-sensitive furniture or contact surfaces must be observed or thermal insulation fitted.

With a total connected load of more than 11 kW local regulations concerning room ventilation, room size and combination of extraction or recirculation hoods must be observed.

The minimum distance between the cooktop surface and a cabinet above, out of combustible material, needs to be 65 cm.

The minimum distance to a ventilation above is shown at the planning hints for the individual ventilation product.

Appliance weight: approx. 11.

Connection

Total connected load gas 6.0 KW.

Total connected load electric 10.0 W.

Connecting cable 1.5 m with plug.

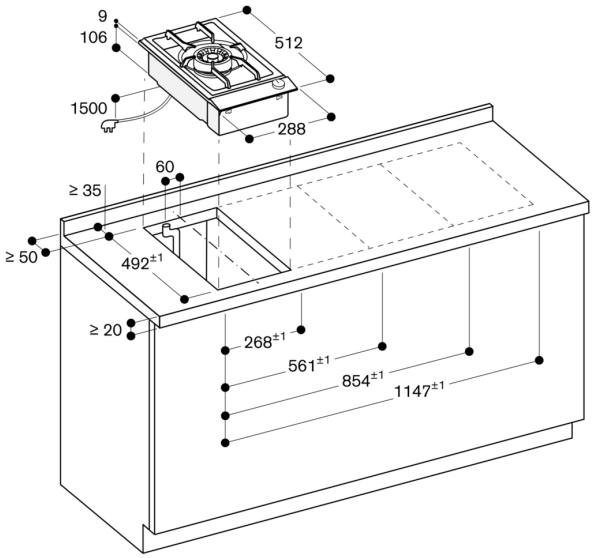

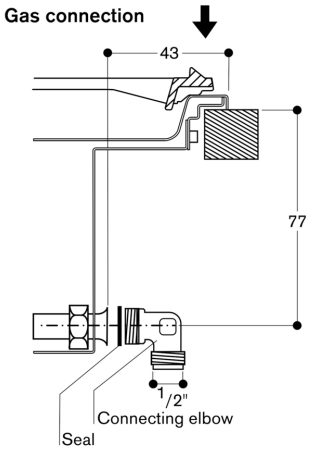

Minimum distance from the appliance cut-out to the side wall 150 mm.

measurements in mm