RVW467170

F A↑G

Included accessories

2 x bottle holder grid plate
1 x bottle presenter
1 x wood plate

Optional accessories

RVA450220:
Activated charcoal air filter, 2 pcs

RVA491660:
Extendable bottle tray, oak wood, RVW467

RVA493060:
Wine presenter, oak wood, 1 piece set

RVA494060:
Removable tray, oak wood for RVW

RVA495000:
Glass hanger for RVW

RVA498660:
Bottle support, for RVW467 61 cm (24")

installation accessories

RA425110:
Vario SS handle 1131 mm

RA460020:
Frontpanel connection long

RVA420010:
Door lock for RVW

RVA421622L:
SS doorframe w handle left 61 cm (24")

RVA421622R:
SS doorframe w handle right 61 cm (24")

RVA423141:
Side trims, 3 mm

RVA428622:
SS doorframe w/o handle 61 cm (24")

RVA430000:
Screw hole cover set for RVW

RVA460000:
Installationskit side-by-side

RVA460020:

wine climate cabinet Vario cooling Expressive series
213.4 x 61 cm
RVW467170

Highlights

Automatic tempering programmes (sensor-based) for achieving precise drinking temperature.
3 independently controllable climate zones, thereof 2 with automatic tempering progammes.
Consistent temperatures with exact control from +5 °C to +20 °C (manual mode) and from +3 °C to +20 °C (automatic tempering programmes).
Humidity control
Low-vibration operation for optimal long term storage conditions.
Dark brushed stainless steel interior.
Fully extendable bottle trays with hidden telescopic rails and cushioned closing system.
Bottle trays made of oak wood and solid aluminium in anthracite.
Warm white and glare-free LED light concept for optimal wine presentation in all climate zones.
3 pre-defined light scenarios and individual light settings to perfectly integrate into living environement.
Opening assist for door with two options:
1. Push-to-open function for integration into handleless furniture front
2. Pull-to-open function to facilitate opening the door using a handle
Full touch TFT display
Capacity 110 bottles (based on 0.75 l standard bottles).

Handling

Opening assist for door.
Cushioned door closing system.
User guidance through light and display responses during operation. User guidance through light and display responses during operation.
Automatic brightness adjustment based on ambient illumination when opening the door.
Easy accessible full touch TFT display.
Animated quick guides to assist appliance usage and maintenance.
Lockable door (with door lock RVA 420 010).

Features

Dynamic cold air distribution.
Automatic defrosting with defrost water evaporation.
IR-sensor for automatic wine tempering programmes.
Constant air purification by activated charcoal air filter in each climate zone.
UV protection (UV transmission: 19 %).
Rest mode certified by Star-K.
When rest mode is active, the appliance can only be opened using a handle.
Open-door and malfunction alarm.

Selected digital services (Gaggenau Home Connect)

Remote control and monitoring.
Software updates.
Personalisation function for saving custom automatic tempering programmes.
Pre-defined light scenarios with individualisation possibility (Favourites).

Features

10 bottle trays, thereof 8 fully extendable.
Space for max. 11 bottle trays.
Flexible interior configuration possible with a variety of special accessories.
Storage of Magnum bottles possible on every tray (up to 4 Magnum bottles).
Optimal wine presentation with warm white and glare-free, hidden LED light bars (3000 K) in each climate zone.
Removable oak wood tray for presenting open bottles or decanters.
Presenter to stage one wine bottle.
Total volume 401 litres.

Product rating

Energy efficiency class F at a range of energy efficiency classes from A to G.
Energy consumption 132 kWh/year.
Noise level 38 dB (A) re 1 pW.

Planning notes

Flat hinge.
Door hinge right, reversible, with accessory.
Door opening angle of 115°, fixable at 90°.
Max. door panel frame weight 71 kg.
No Transport/operation above 2000m sea level

Connection

Total connected load 0.300 KW.
Connecting cable 3.0 m, pluggable.

RVW467170
Backward compatibility kit SbS

RVA466610:
Door direction change kit wine 61cm/24"

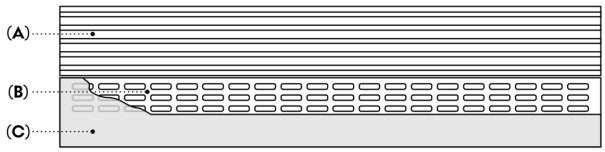

A: Air inlets and exhaust air outlets
B: Ventilation openings in skirting board area
C: Skirting board

The height of the plinth can be reduced to 2″ (50 mm) based on the standard installation height
The skirting board height needs to be reduced to match the plinth height to allow for the additional ventilation

Plinth area

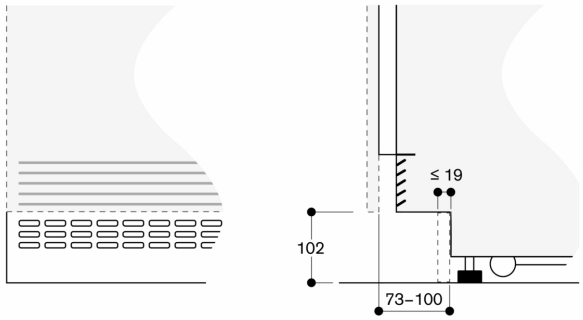

Based on the standard installation height, the height of the plinth is 102 mm

The height of the plinth can be reduced to 50 mm

Maximum skirting board thickness 19 mm

Measurements in mm

Installation niche for an individual appliance

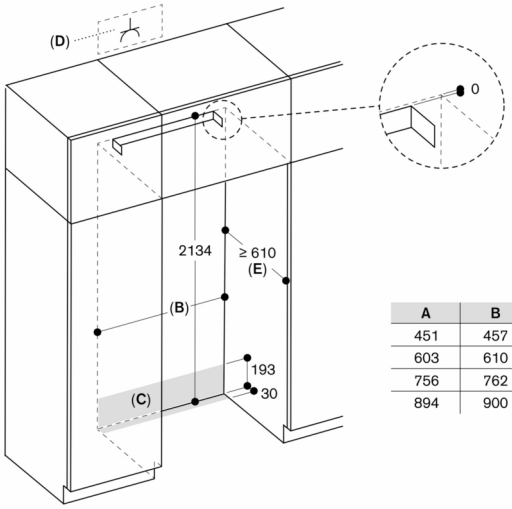

A	B
451	457
603	610
756	762
894	900

A: Appliance width
B: Width of installation niche
C: Area for guiding water supply hose
D: Socket
E: Depth of installation niche, depending on kitchen design

Measurements in mm

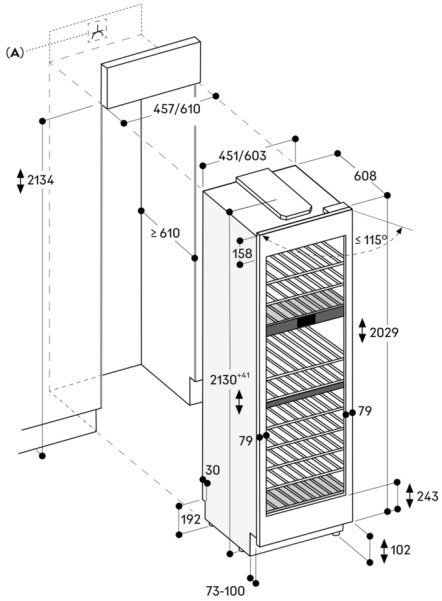

A: Electrical connection

Maximum door panel dimensions are based on a clearance of 3 mm

The height of the plinth can be reduced to 50 mm

Measurements in mm

Niche width 610 mm

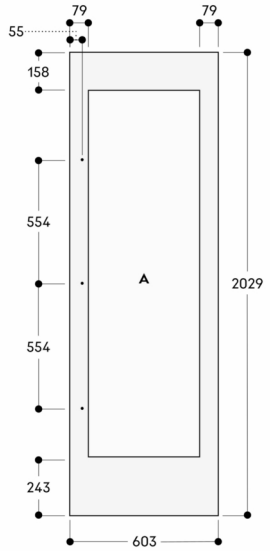

The door panel thickness is 19 mm
The maximum door panel dimensions are based on a clearance of 3 mm, based on a single niche
A: The width of the lateral frame parts can be between 74 mm and 82 mm

Measurements in mm

Niche width 610 mm

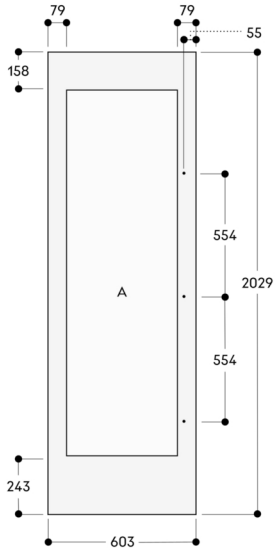

The door panel thickness is 19 mm
The maximum door panel dimensions are based on a clearance of 3 mm, based on a single niche
A: The width of the lateral frame parts can be between 74 mm and 82 mm

Measurements in mm

Niche width 610 mm

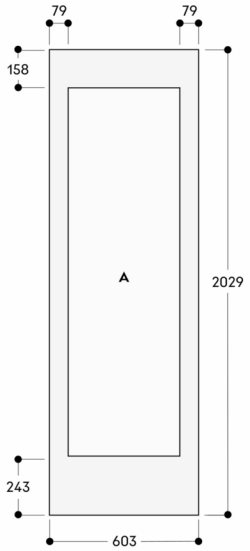

The door panel thickness is 19 mm
The maximum door panel dimensions are based on a clearance of 3 mm, based on a single niche
A: The width of the lateral frame parts can be between 74 mm and 82 mm

Measurements in mm

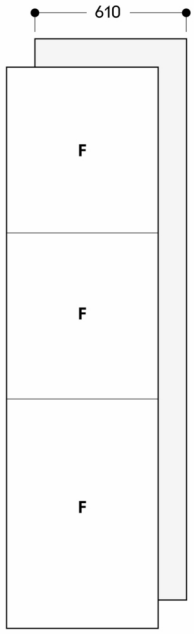

F : Wine

Measurements in mm

Wall clearance RVB / RVC / RVF / RVW

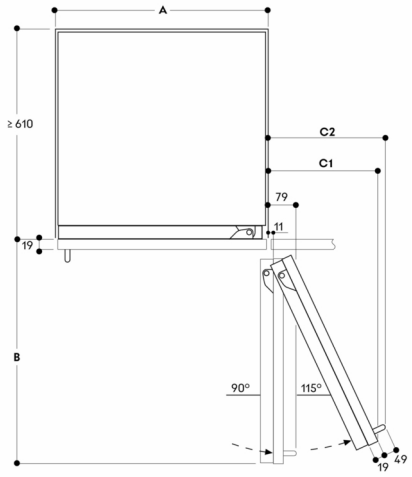

Niche width

A	B	C1	C2
457	525	235	265
610	677	299	330
762	830	364	395
900	970	420	442

The drawing is based on a door panel thickness of 19 mm as well as the height of a Gaggenau handle of 49 mm

Measurements in mm

Bottle storage

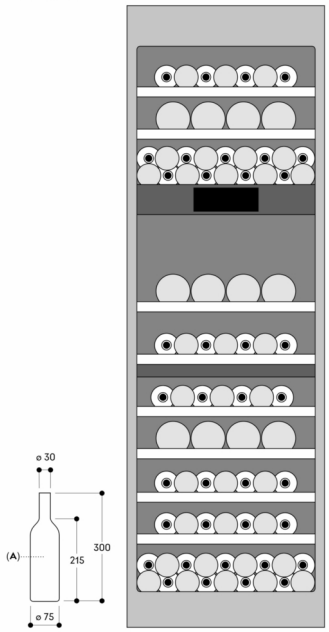

All levels are suitable for storage of Magnum bottles (1.5 litres)

A: 0.75 litres

Measurements in mm

Door opening angle

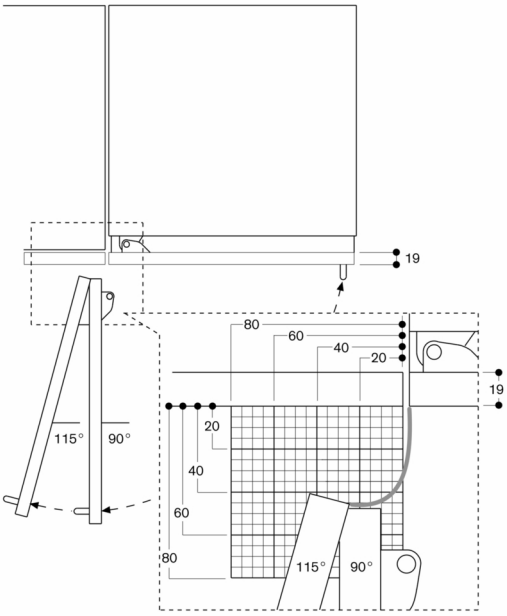

The hinge travel and resulting clearances from adjacent furniture units and handles can be found from the drawing while allowing for the thickness of the front panel. In the drawing, a furniture unit front panel thickness of 19 mm was assumed.