RC472305

Included accessories

1 x egg box with lid

Optional accessories

RA430100:
Storage container with lid, anthracite

installation accessories

RA425110:
Vario SS handle 1131 mm

RA460020:
Frontpanel connection long

Vario refrigerator 400 series
213.4 x 76.2 cm
RC472305

- Stainless steel interior with solid anthracite aluminium elements
- TFT Touch Display
- Immerse your kitchen in a mesmerizing glow with Gaggenau´s Glare-Free LED Light Spots and showcase your dishes like never before.
- Fresh cooling drawer close to 0 °C
- Humidity Adjustable DrawerStainless steel interior with solid anthracite aluminium elements

Warm white and glare-free LED light spots
Opening assist for door with two options:
1. Push-to-open function for integration into handleless furniture front
2. Pull-to-open function to facilitate opening the door using a handle
The drawers in the fridge and freezer models are positioned at the same height.
With side-by-side installation, the glass shelves and door racks can be aligned on the same level
Flat stainless steel inner door, full-length
Smooth design rail system providing flexible positioning for shelves and door racks
Solid anthracite aluminium door racks
1 fresh cooling drawer 0 °C with temperature control from -1 °C to +3 °C and one fresh cooling drawer with manually adjustable humidity
TFT touch display
Total volume 467 litres

Handling
TFT touch display operation.
Clear text display.

Features
Dynamic cold air distribution.
Automatic defrosting with defrost water evaporation.
Cushioned door closing system.
Activated charcoal air filter.
Rest mode certified by Star-K.
When rest mode is active, the appliance can only be opened using a handle.
Open-door and malfunction alarm.

Selected digital services (Gaggenau Home Connect)
Remote control and monitoring.
Remote diagnostics.
Integrated WiFi module for digital services (Home Connect).
The availability of the Home Connect functionality depends on the availability of the Home Connect Services in your country. Home Connect Services are not available in every country – for further information please check: www.home-connect.com

Cooling
Fast cooling.
Temperature adjustable from +2 °C to +8 °C.
3 safety glass shelves, white glass, individually adjustable in height.
1 shallow, fully extendable drawer with transparent front.
1 integrated shelf.
Cushioned closing system.
4 brilliant LED light spots with warm white, glare-free light (3500 K) within cooling area and drawers.
Smooth design door rail system with fully flexible positioning of door racks.
4 height-adjustable door racks, 1 of which is extra deep.
Volume 398 litres.

Fresh cooling 0 °C
1 large, fully extendable fresh cooling 0 °C drawer with transparent front, illuminated.
Cushioned closing system.
Temperature control via central TFT display, temperature can be adjusted from -1 °C to +3 °C.
Ideal for meat, fish and poultry.
Net volume 69 litres.

Fresh cooling
1 fully extendable fresh cooling drawer with transparent front, illuminated.
Cushioned closing system.
Humidity can be adjusted manually.
Ideal for fruit and vegetables.

Product rating
Energy efficiency class E at a range of energy efficiency classes from A to G.
Energy consumption 166 kWh/year.
Noise level 40 dB (A) re 1 pW.

Planning notes
Flat hinge.
Door hinge right, reversible.
Door opening angle of 115°, fixable at 90°.
Max. door panel weight 29 kg.

Connection
Total connected load 0.300 KW.
Connecting cable 3.0 m, pluggable.

Door opening angle

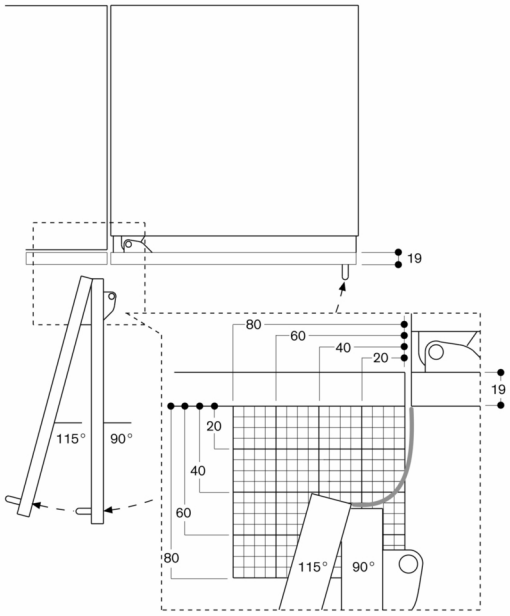

The hinge travel and resulting clearances from adjacent furniture units and handles can be found from the drawing while allowing for the thickness of the front panel. In the drawing, a furniture unit front panel thickness of 19 mm was assumed.

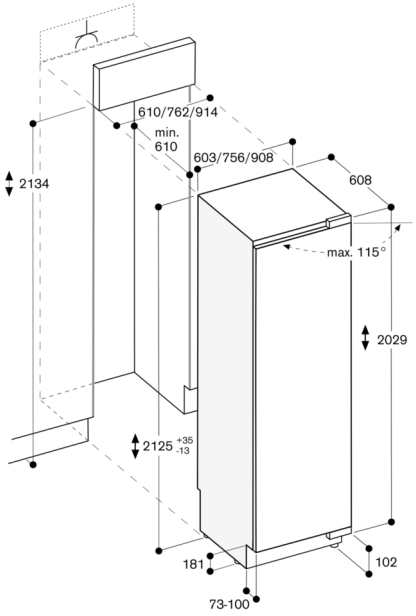

The maximum door panel dimensions are based on a clearance of 3 mm.

Wall clearance RB 472/RC/RF/RW

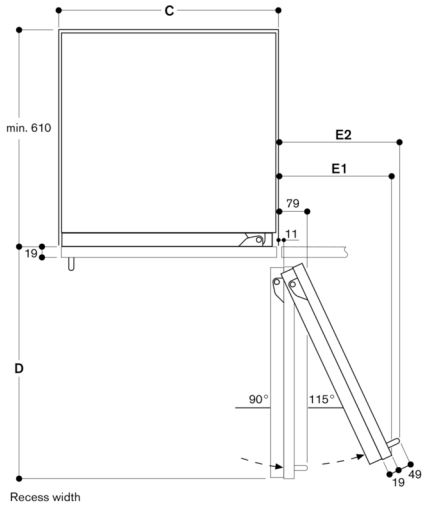

Recess width

C	D	E1	E2
457 mm	525 mm	235 mm	265 mm
610 mm	677 mm	299 mm	330 mm
762 mm	830 mm	364 mm	395 mm
914 mm	980 mm	428 mm	460 mm

In the drawing, a unit front thickness of 19 mm and a Gaggenau unit handle of 49 mm were taken as a basis.

Base detail

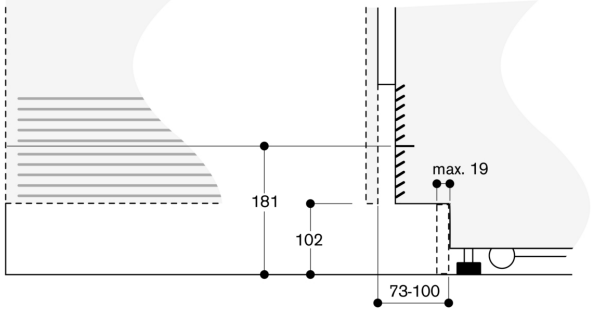

Based on the standard appliance height, the height of the plinth is 102 mm. Maximum plinth thickness 19 mm.

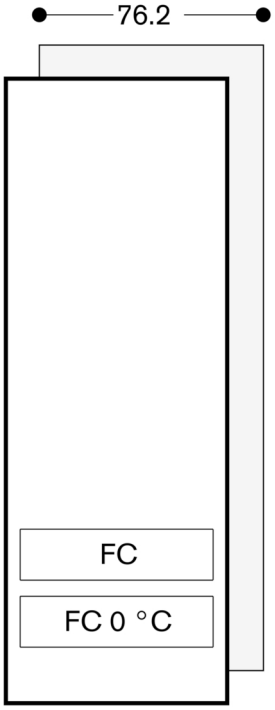
76.2
FC
FC 0 °C