Series 4, Induction hob, 60 cm
PUE611BB1E

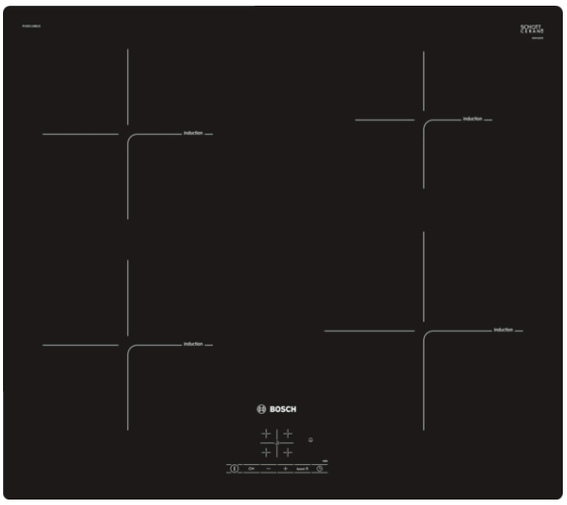



Optional accessories
HEZ9SE030 : Set of 2 pots and 1 pan

The Induction hob: Faster than gas and ceramic hobs, induction is easier to clean and more energy efficient.

- **TouchSelect:** Selection of the desired cooking zone and easy setting of the desired power level.
- **PowerBoost:** up to 50% more power for faster heating on your induction hob.
- If you turn off the cooktop it saves the last selected setting for a short time. If the cooktop is switched off within a short time again the former settings are still available.
- **Timer with switch-off function:** Turns off the assigned cooking zone after the set time.
- The handy ChildLock locks the control panel to prevent accidental changes in settings.

Technical Data

Product name/family : Cooking zone ceramic
Construction type : Built-in
Energy input : Electric
Total number of positions that can be used at the same time : 4
Min. required niche size for installation (HxWxD) : 51 x 560-560 x 490-500 mm
Width of the appliance : 592 mm
Dimensions : 51 x 592 x 522 mm
Dimensions of the packed product (HxWxD) : 126 x 753 x 603 mm
Net weight : 10.4 kg
Gross weight : 12.6 kg
Residual heat indicator : Separate
Location of control panel : Hob front
Basic surface material : Ceramic
Color of surface : Black
Length of electrical supply cord : 110.0 cm
EAN code : 4242002870502
Voltage : 220-240 V
Frequency : 50; 60 Hz

4 242002 870502

Series 4, Induction hob, 60 cm
PUE611BB1E

The Induction hob: Faster than gas and ceramic hobs, induction is easier to clean and more energy efficient.

Design

- Frameless design
- 60 cm: space for 4 pots or pans.

Flexibility of cooking zones

- Cooking zone front left: 180 mm, 1.8 KW (max. power 3.1 KW)
- Cooking zone rear left: 180 mm, 1.8 KW (max. power 3.1 KW)
- Cooking zone rear right: 145 mm , 1.4 KW (max power 2.2 KW)
- Cooking zone front right: 210 mm, 2.2 KW (max. power 3.7 KW)

Usage convenience

- TouchSelect: control the power with imprinted +/- touch buttons.
- Variable 17-stage power settings for each zone: precisely adapt the heat with 17 power levels (9 main levels and 8 intermediate levels).
- Timer for all zones
  : switches off the cooking zone at the end of the time set (e.g. for boiled eggs).
- Timer - shows how long the cooktop is in use
  : an alarm sounds at the end of the time set (e.g. for pasta).

Time saving & efficiency

- PowerBoost function for all zones
  : boil water faster thanks to 50% more energy than at the highest standard level.
- QuickStart function: when switching on, the hob automatically selects the cooking zone with cookware (when placed on a zone whilst the hob is off).
- ReStart function: in case of unintentional switch-off, this feature restores all previous settings by switching on the hob again within 4 seconds.
- Quick Stop: quickly switch off a cooking zone with one longer touch.

Safety

- 2 stage residual heat indicator for each zone: indicates which cooking zones are still hot or warm.
- Control panel lock: prevent unintended activation of the hob.
- Main on/off switch: switch off all cooking zones at the touch of a button.
- Automatic safety shut off: for safety reasons, heating stops after a preset time if not used (possible to customise).

Installation

- Dimensions of the product (HxWxD mm): 51 x 592 x 522
- Required niche size for installation (HxWxD mm) : 51 x 560 x (490 - 500)
- Min. worktop thickness: 16 mm
- Connected load: 4.6 KW
- Power management options for 16A, 13A or 10A connection: limit the maximum power if needed (depends on fuse protection of electric installation).
- Power cord: 1.1 m, Cable included
- Nominal voltage: 220 - 240 V

Series 4, Induction hob, 60 cm
PUE611BB1E

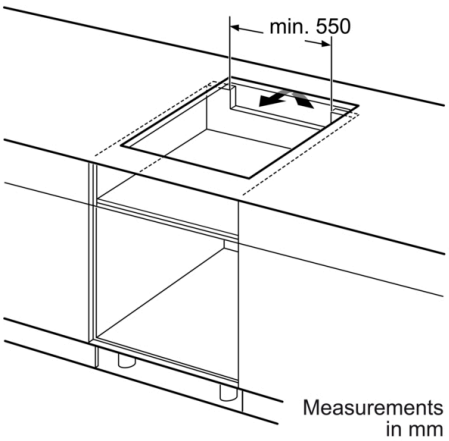

Measurements in mm

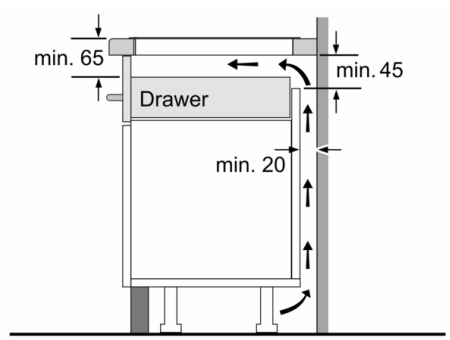

Measurements in mm

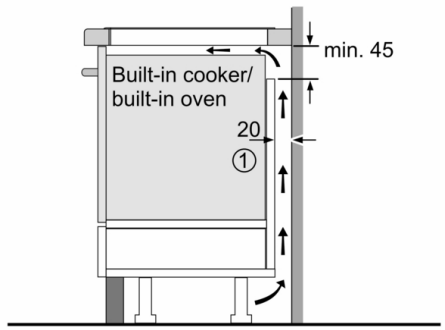

① Ventilation gap must be present

All measurements in mm

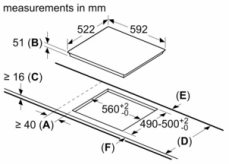

A: Minimum distance from the hob cut-out to the wall.
B: Recessed depth
C: The clearance between the surface of the worktop and the top of the front of the oven must be 30 mm. See space requirements for the oven.

The worktop into which the hob is installed must withstand loads of approx. 60 kg; suitable substructures must be used if required.

D	E	F
585-600	50	≥ 35
> 600	≥ 50	≥ 50