SIEMENS

iQ300, Wall-mounted cooker hood, 75 cm, Stainless steel LC77BHM50B

B

touchControl

Box design extractor hood with high extraction rate.

- ✓ LED lights: for optimal visibility and ambience while cooking.
- ✓ touchControl: quickly and easily manage the power levels and the LED light

Features

Technical Data

Typology: ..... Wall-mounted
Length electrical supply cord: ..... 130.0 cm
Height of the chimney: ..... 583-912/583-1022 mm
Height of the appliance: ..... 53 mm
Minimum distance above an electric hob: ..... 550 mm
Minimum distance above a gas hob: ..... 650 mm
Weight: ..... 13.5 kg
Control panel: ..... Electronic
Number of speed settings: ..... 3-stages + intensive setting
Maximum output air extraction: ..... 454 m³/h
Boost position output recirculating: ..... 499 m³/h
Maximum output recirculating air: ..... 404 m³/h
Boost position air extraction: ..... 739 m³/h
Maximum Air flow: ..... 454 m³/h
Number of lights: 2
Noise level: ..... 65 dB(A) re 1 pW
Diameter of air outlet: ..... 120 / 150 mm
Grease filter material: ..... Washable stainless steel
EAN code: 4242003824184
Connection Rating: ..... 255 W
Fuse protection: ..... 10 A
Nominal power: ..... 220-240 V
Frequency: ..... 50; 60 Hz
Plug type: ..... GB plug
Installation type: ..... Wall-mounted

4 242003 824184

Optional accessories

LZ00XXP00	Long Life odor filter (replacement)
LZ10DXA00	Standard odor filter (replacement)
LZ10DXU00	Standard recirculation kit
LZ10FXJ00	Long Life recirculation kit
LZ11DXB14	Clean Air Standard odor filter (repl.)
LZ11DXI14	Clean Air Standard recirculation kit
LZ11DXI16	Clean Air Plus recirculation kit
LZ11FXC56	Clean Air Plus recirc. kit external
LZ11FXD51	Long Life recirculation kit external
LZ12250	Chimney extension 1000 mm
LZ12350	Chimney extension 1500 mm
LZ31XXB16	Clean Air Plus odor filter (replacement)

SIEMENS

iQ300, Wall-mounted cooker hood, 75 cm, Stainless steel LC77BHM50B

Features

Key performance features:
- Energy Efficiency Class: B (at a range of energy efficiency classes from A+++ to D)
- Extraction rate according to EN 61591 ø 15 cm:
- max. Normal use453m³/h
- Intensive739 m³/h
- Noise max. Normal Level: Noise, max. speed in normal us: 65 dB dB*

Features
- touchControl for extractor speeds and light
- touchControl with Electronic display
- 3 x power levels plus intensive setting
- Twin channel high performance fan motor
- 2 x 1.5W LED
- Colour Temperature: 3500 K
- Automatic intensive revert (6mins)
- 2 x metal grease filter cassettes
- Steel filter cover
- Installation: wall

Design
- Chimney hood
- Electronic control

Performance/technical information
- Suitable for ducted and re-circulating operation
- For recirculated extraction a recirculating kit or a CleanAir recurculation kit (accessory) is needed
- Max. extraction rate: 739 m3/h
- Noise level according to EN 60704-3 and EN 60704-2-13 exhaust air:
- Max. normal use:65dB(A) re 1 pW
- Intensive:74 dB(A) re 1 pW
- With the Clean Air Plus recirculation kit (available as optional accessory) your appliances reaches:
- Extraction rate in recirculation mode: Max. normal use:404m³/h
- Intensive:499m³/h
- Noise level in recirculation mode: Max. normal use:72dB(A) re 1 pW
- Intensive:76 dB(A) re 1 pW
- Power rating: 255 W
- Light Intensity: 214 lux
- Electrical cable length 1.3 m
- Diameter pipe Ø 150 mm (Ø 120 mm enclosed)
- Dimensions exhaust air (HxWxD): 635-965 x 750 x 500 mm
- Dimensions recirculating, chimney (HxWxD): 635-1075 x 750 x 500mm
- Dimensions recirculating with CleanAir module (HxWxD):
- 703 x 750 x 500mm - mounting with outer chimney
- 833-1163 x 750 x 500 mm - mounting with telescopic chimney
- Blower Efficiency Class: B*
- Lighting Efficiency Class: A*
- Grease Filtering Efficiency Class: B*
- Average Energy Consumption: 62.5 kWh/year*

Optional accessories
- Recirculating kit LZ00XXP00

* In accordance with the EU-Regulation No 65/2014

SIEMENS

iQ300, Wall-mounted cooker hood, 75 cm, Stainless steel LC77BHM50B
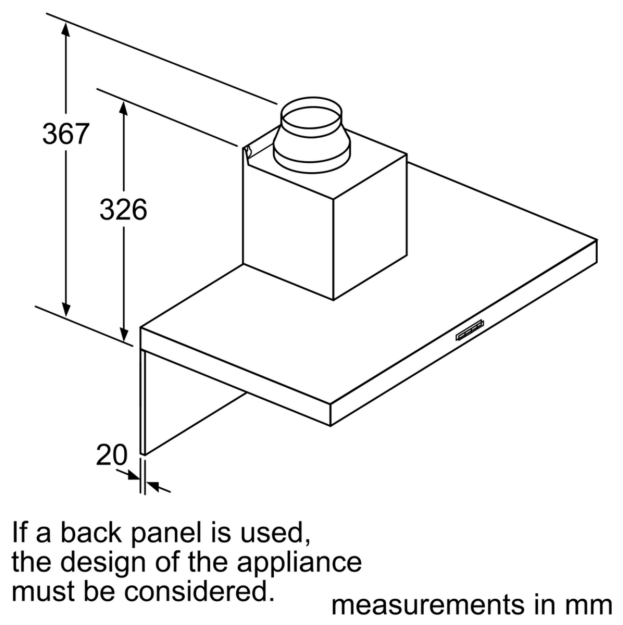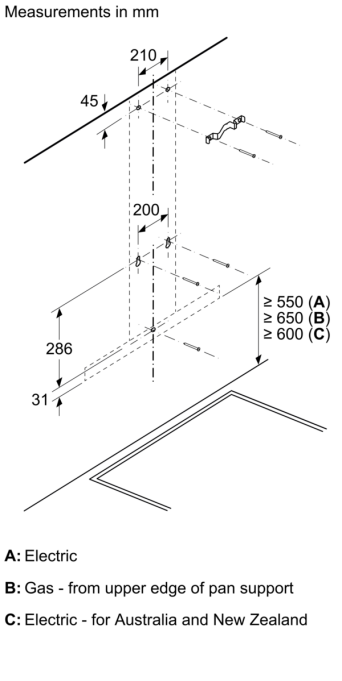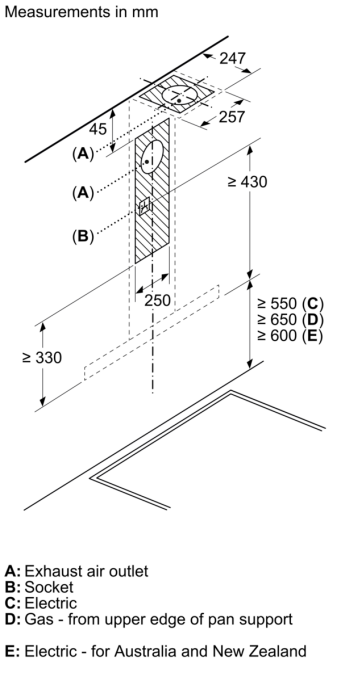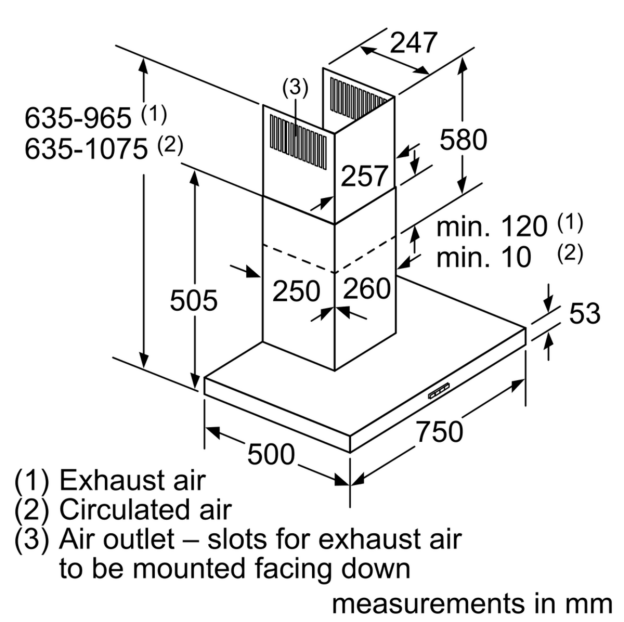
Dimensioned drawings