SIEMENS

iQ300, French door bottom freezer, multi door, 183 x 90.5 cm, Brushed steel anti-fingerprint KF96NVPEAG

American style / Multi door fridge freezer: perfect storage conditions for fish and meat as well as fruits and vegetables plus an abundance of easily accessible frozen food storage.

- ✓ noFrost – Never defrost your freezer again.
- ✓ High-gloss backwall with multiAirflow – Evenly chilled food and drinks on all levels.
- ✓ safetyGlass shelves – Extra strong and easy to clean.
- ✓ LED light – Even lighting throughout the inside of your fridge to keep everything in view.
- ✓ superCooling: faster cooling for fresh food.

Energy Efficiency Class:	E
Average annual energy consumption in kilowatt hour per year (kWh/a):	333 kWh/annum
Sum of volume of frozen compartments:	200 l
Sum of volume of chill compartments:	405 l
Airborne acoustical noise emissions :	38 dB(A) re 1pW
Airborne acoustical noise emission class:	C
Built-in / Free-standing:	Freestanding
Door panel options:	Not possible
Height:	1830 mm
Width of the appliance:	905 mm
Dimensions:	731 mm
Weight:	117.3 kg
Fuse protection:	10 A
Door opening:	left and right
Nominal power:	220-240 V
Frequency:	50-60 Hz
Length electrical supply cord:	240.0 cm
Number of compressors:	1
Number of independent cooling systems:	1
Interior ventilator:	Yes
Reversible Door Hinge:	No
Number of Adjustable Shelves in fridge compartment:	2
Shelves for Bottles:	No
Frost free system:	Fridge and freezer
Installation type:	Freestanding

4 242003 896013

SIEMENS

iQ300, French door bottom freezer, multi door, 183 x 90.5 cm, Brushed steel anti-fingerprint KF96NVPEAG

- Stainless steel anti-fingerprint doors and chrome inox metallic side panels
- EU19_EEK_D: E
- Total Volume : 605 l
- Net Fridge Volume : 405 l
- Net Freezer Volume : 200 l
- Freezing capacity 24h : 13 kg
- Annual Energy Consumption: 333 kWh/a
- Climate Class: SN-T
- EU19_Fast freezer facility_D
- Noise Level : 38 dB , EU19_Noise emission class_D: C
- Temperature rise time : EU19_Temperature rise time_D: 15 H
- Standard door Stainless steel anti-fingerprint

Performance and Consumption

Design features

- Interior design with metal applications
- Standard door
- Stainless steel anti-fingerprint door and chrome inox metallic side panels.
- White glossy back wall
- LED display for fridge and freezer
- Automatic defrost in fridge section
- Sabbath Mode
- Super Cooling: automatic deactivation
- optical, acoustic for Fridge and Freeze
- Freezer malfunction warning signal: optical, acoustical
- Bright interior LED fridge light in fridge section

Food freshness system

- multiAirflow cooling - improves circulation of air around the fridge
- coolBox - extra cold fridge drawer. Ideal to store meat and fish.

Dimension and installation

- 4 wheels for easier transport, 3 of them height adjustable.
- 220 - 240 V
- Dimensions: 183 cm H x 90.5 cm W x 73.1 cm D

Key features - Fridge section

- 3 safety glass shelves of which 2 are height adjustable, Standard shelf 2 shelves extendable
- Door shelves in fridge door: 2 large and 3 small.
- 3 safety glass shelves (2 height adjustable)
- 2 removable door storage compartments.
- Bright interior LED fridge light
- 1 crisperBox - vegetable/salad container with humidity control

Key features - Freezer section

- 1 ice cube tray
- NoFrost
- 6 freezer drawers
- Net 4* compartment volume : 200 l
- Freezer malfunction warning signal: Acoustic Warning System
- Based on the results of the standard 24-hour test. Actual consumption depends on usage/position of the appliance.
- To achieve the declared energy consumption, the attached distanceholders have to be used. As a result, the appliance depth increases by about 3.5 cm. The appliance used without the distance holder is fully functional, but has a slightly higher energy consumption.

SIEMENS

iQ300, French door bottom freezer, multi door, 183 x 90.5 cm, Brushed steel anti-fingerprint KF96NVPEAG

Measurements in mm

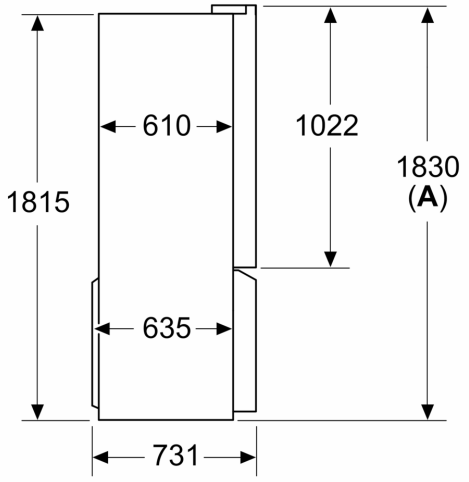

A: Front is adjustable 1830–1847 mm, with front levelling feet fully extended

Measurements in mm

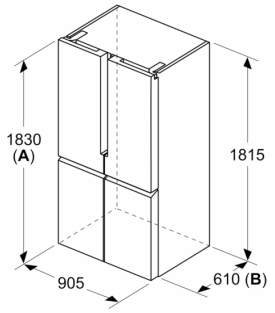

A: Front is adjustable 1830–1847 mm, with front levelling feet fully extended

B: Add 25 mm for fixed spacers on back

Measurements in mm

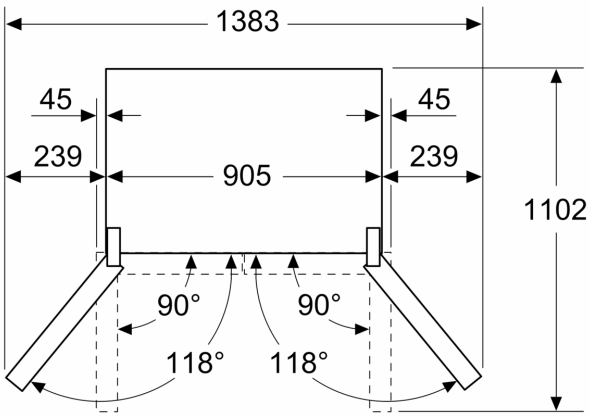

Measurements in mm

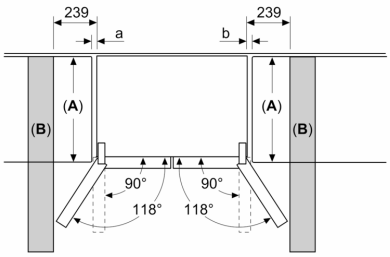

A	a	b
≤ 600	0	0
600 < A ≤ 650	45	45
650 < A ≤ 700	60	60
> 700	239	239

A: Kitchen cabinet or worktop depth

B: Wall
Drawers can be pulled and taken out with door open to 90°