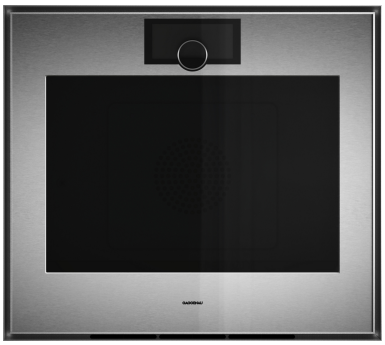

GO480120

A A+++ D

Included accessories

1 x baking tray
1 x grill tray
1 x wire rack
1 x core temperature probe
1 x rotisserie spit

Optional accessories

BA018106:
1 Fully extendable rack for 76cm oven

BA028110:
Air frying tray set 76cm

BA028115:
Baking tray, for 76cm/90cm oven

BA038105:
Wire shelf, for 76cm/90cm oven

BA058134:
Baking stone for 76cm oven

BS020003:
Pizza paddle

GN340231:
Gastronorm roaster GN 2/3

oven Gaggenau Expressive series
76 x 67 cm, door hinge: right, stainless steel behind smoked glass
GO480120

- Automatic programmes and setting recommendations enables precise and perfect results
- Seamless interface design with refined aesthetics, featuring a floating stainless steel ring and haptic feedback
- Full-size side-hinged door with one-touch opening for easy, ergonomic access
- Pyrolytic self-cleaning offers high-efficiency cleaning in less than 4 hours, maintaining a spotless oven
- 125-litre capacity allows versatile cooking, ideal for large gatherings and multi-dish preparation

Highlights

Handleless full glass door with electronic door opening.
Full touch display with stainless steel control ring.
Light and display response upon user detection.
Pyrolytic system
Invisible full surface grill behind enamel.
19 heating methods from 30 °C to 300 °C, incl. baking stone function, roaster function, air frying, dehydrating.
Automatic programmes and setting recommendations.
Core temperature probe.
Rotisserie spit.
Net volume 125 litres.

Heating methods / Programmes

Hot air plus.
Hot air eco.
Top + bottom heat.
Top + 1/3 bottom heat.
Top heat.
Bottom + 1/3 top heat.
Bottom heat.
Hot air + bottom heat.
Hot air + 1/3 bottom heat.
Moist baking.
Grill + circulated air.
Grill.
Baking stone function.
Roaster function.
Air frying.
Dehydrating.
Dough proving.
Keeping warm.
Defrosting.
160 programmes (automatic programmes and setting recommendations).
Option to save up to 30 favourites.

Handling

Cushioned side-opening door with 110 ° opening angle.
Electronic door opening.
Full touch display with control ring.
42 display languages available.
User detection, adjustable distance.
Info texts for additional information.
Animated quick guides to assist appliance operation.

Features

Invisible full surface grill behind enamel 4.5 kW.
Grill can be added briefly in hot air mode for additional browning.
Hot air fan rotates in both directions for ideal heat distribution
Extra powerful bottom heating for baking stone and roaster function.
Three-point core temperature probe with cooking time estimation via Home Connect.
Rotisserie spit for grilling from all sides.
Precise temperature control with display of the current temperature.
Rapid heating.
Heated air cleaning catalyser.
Timer functions: cooking time, cooking time end, count-up timer.
Long-term timer with pre-programmable heating cycles.
Programmable automatic door opening at cooking time end to avoid overcooking.
Optimum visibility of the food thanks to side lighting.
5 tray levels.

Selected digital services (Gaggenau Home Connect)

Remote control and monitoring.
Software updates.
Cooking time estimation when using the core temperature probe.
Door opening via voice assistant.

Safety

Child lock to prevent accidental switch on or operation of the appliance.
Electronic door lock to prevent unintentional opening of the appliance door.
Safety shut-off.
Thermally insulated door with quintuple glazing.
Cooled housing with temperature protection.

Cleaning

Pyrolysis with minimized odour development thanks to the heated catalyser.
Side shelf supports enamelled and pyrolysis-safe.
Seamless cooking compartment without obstructive elements.

Planning notes

Plan the niche without back wall.
Door hinge not reversible.
Protrusion from appliance front to furniture cabinet 42 mm.
When planning a corner solution, pay attention to the side-opening door and the minimum required distance to the wall.
Door opening angle appr. 110° (delivery status) can be reduced to appr. 97° if required.
For installation underneath cooktops: distance between the underside of the cooktop and the top edge of the oven housing: min. 15 mm. The planning notes for the cooktops (particularly regarding ventilation, gas/electric connection) must be taken into account.
The mains socket must be accessible and located outside the built-in niche.

Connection

Energy efficiency class A at a range of energy efficiency classes from A+++ to D.

Total connected load 6.6 KW.
Connecting cable 1.75 m without plug.

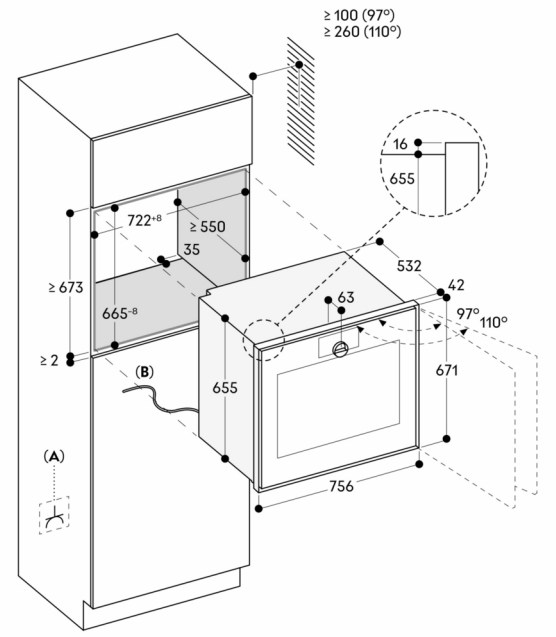

A: Accessible electrical connection
B : Fixed cable

Measurements in mm