CX492111

Optional accessories

CA060300:
Wireless temperature sensor for cooktop

GN232110:
Teppan Yaki GN 1/1

installation accessories

VA420004:
Connecting strip Serie 400, flush, short

VA420010:
Connecting strip Serie 400, top, short

Full surface induction cooktop 400 series
90 cm
CX492111

- TFT touch display for an intuitive control of all functions
- One single big cooking surface
- Professional cooking function for splitting the cooktop into predefined heat areasOne single big cooking surface

Free positioning of cookware
All sizes and formats of cookware can be used
TFT touch display for an intuitive control of all functions
Cooking sensor function for temperature control in pots
Professional cooking functions
Max. power output for big cookware of up to 5.5 KW
Precision crafting of 3 mm stainless steel
For surface installation with a visible edge or for flush installation
Can be combined perfectly with other Vario appliances of the 400 series

Cooking zones

One unique cooking surface of 3200 cm².
Up to 6 items of cookware can be placed simultaneously on the cooktop.

Handling

Easy to use colour graphic TFT touch display with use indications.
Electronic power control in Variable 17-stage power settings for each zone.

Features

Cooking sensor function.
Professional cooking function.
Dynamic cooking function.
Teppan Yaki function.
Booster function for pots.
Booster function for pans.
Keep warm function.
Individual pot detection.
Cooking timer for each cooking position.
Stopwatch.
Short-term timer.
Information key with use indications.
Power management.

Selected digital services (Gaggenau Home Connect)

Cooktop-based ventilation control (with suitable hood).
Remote monitoring.
Remote diagnostics.
Integrated WiFi module for digital services (Home Connect).
The availability of the Home Connect functionality depends on the availability of the Home Connect Services in your country. Home Connect Services are not available in every country – for further information please check: www.home-connect.com

Safety

Main switch.
Residual heat indication.
Child lock.
Safety shut-off.
Pause function.

Planning notes

Depending on the type of installation (surface-mounted or flush-mounted), the specific definition of the cut-out must be observed.
If combining several Vario appliances of the 400 series, a connection strip VA 420 must be placed between the appliances. Depending on the type of installation, the corresponding connection strip must be provided.
The bearing capacity and stability, in the case of thin worktops in particular, must be supported using suitable substructures. Take into account the appliance weight and additional loads.
Additional instructions for flush installation:
Installation is possible in worktops made of stone, synthetics or solid wood. Heat resistance and watertight sealing of the cut edges must be observed. Concerning other materials please consult the worktop manufacturer.
The groove must be continuous and even, so that uniform placing of the appliance on the gasket is ensured. Do not use discontinuous lining.
The joint width may vary due to size tolerances of the combinations and of the worktop cut-out.
If installing several appliances in individual cut-outs allow for a division bar of minimum 50 mm between the individual cut-outs.
Operates with magnetic (induction) iron pots and pans only. For an optimal heat distribution, the use of sandwich bottom cookware is recommended.
The wok pan WP 400 001 cannot be used with this appliance.
Appliance can be snapped into the worktop from above.
Appliance weight: approx. 30.

Connection

Total connected load 7.4 KW.
Connecting cable 1.50 m without plug.
Power consumption standby/display off 0.5 W.
Power consumption standby/network 2 W.
Please check the user manual for how to switch off the WiFi module.

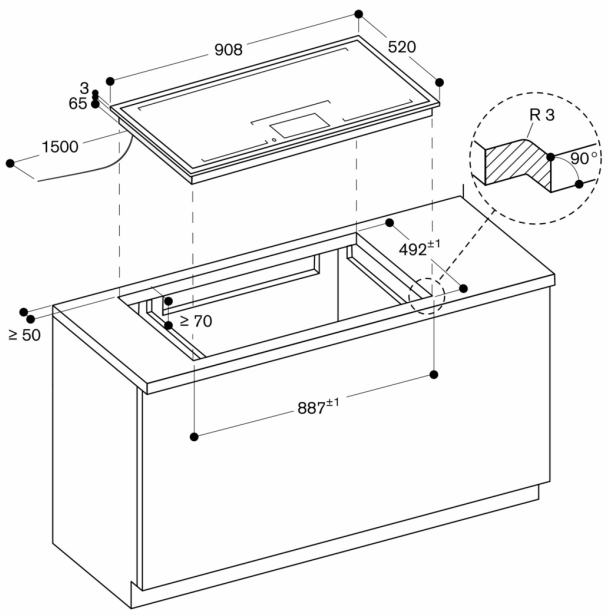

measurements in mm

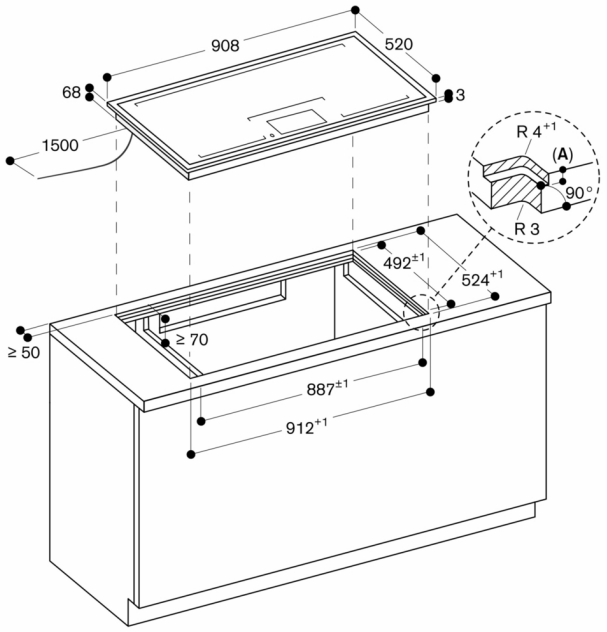

A: $3.5^{-0.5}$

measurements in mm

View from above

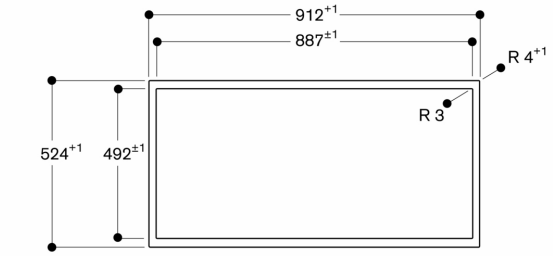

measurements in mm

Cross-section

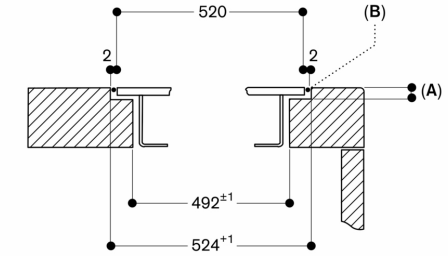

A: $3.5^{-0.5}$
B: Fill with silicone

measurements in mm

Longitudinal section

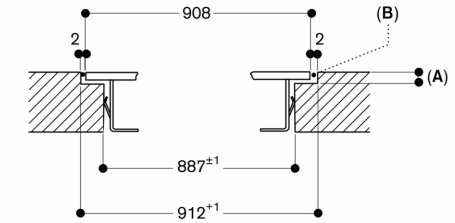

A: $3.5^{-0.5}$
B: Fill with silicone

measurements in mm