CV282101

A A+++ ↑ D

Optional accessories

CA050300:
Flex pan set, 3 pcs.

CA051301:
Teppan Yaki

CA052300:
Griddle Plate

CA055300:
Flex pan large

CA084010:
Acoustic filter

CA282112:
Recirculation replenishment filter CV

installation accessories

CA082011:
Kit unducted recirculation

CA082061:
Kit ducted recirculation, 60 cm worktop

CA082071:
Kit ducted recirculation, 70 cm worktop

CA084010:
Acoustic filter

Flex induction cooktop with integrated ventilation system 200 series
80 cm
CV282101

- Fully automatic ventilation system functions
- Large-scale metal grease filter, easy to remove, dishwasher-safe
- Magnetic Twistpad in stainless steel or black
- Flexible positioning of cookwareFlex function for combining the rectangular cooking areas

Flexible positioning of cookware inside combined cooking areas
Highly efficient ventilation system integrated in the cooktop
Fully automatic ventilation system functions
Large-scale metal grease filter, easy to remove, dishwasher-safe
Air extraction or recirculation system
Integrated activated charcoal filter easily removeable from above for air recirculation system
Twist-Pad control with removable, black magnetic knob
Easy control of all functions with two color displays

Cooking zones
2 flex induction cooking areas 24x20 cm (2200 W, with booster 3700 W), linked together 24x40 cm (3300 W, with booster 3700 W).
2 flex induction cooking areas 24x20 cm (2200 W, with booster 3700 W), linked together 24x40 cm (3300 W, with booster 3700 W).

Performance of ventilation system
Performance and noise level, output level 3/Intensive:
Air output according to DIN EN 61591.
Sound power level according to EN 60704-3.
Sound pressure level according to EN 60704-13.
Air extraction:
532 / 636m³/h.
70 / 74 dB (A) re 1 pW.
Air recirculation:
487 / 611m³/h.
67 / 72dB (A) re 1 pW.
55 / 61 dB (A) re 20 µPa.

Handling
Twist-Pad control with removable magnetic knob.
User friendly control with two color display (white / orange).
Cooking zone, and cooking area marking.
Electronic power control of the cooking zone in Variable 17-stage power settings for each zone.
Control of ventilation system with 3 electronically controlled power levels and 1 intensive mode.

Features
Flex function for rectangular cooking areas.
Automatic pot detection when the cooktop is switched on.
Professional cooking function.
Cooking sensor function (in use with cooking sensor CA 060 300).
Frying sensor function.
Booster function for pots.
Booster function for pans.
Keep warm function.
Automatic sensor-controlled performance adjustment of the ventilation system.
Automatic activation of the ventilation system when a cooking zone is used.
Interval ventilation, 6 min.
Automatic sensor-controlled or manual run-on function.
Grease filter and activated charcoal filter saturation indicator.
Removable, dishwasher-safe grease filter unit.
High-grade black zinc die-casted cover for ventilation system, dishwasher-safe.
Fan technology with brushless DC motor (BLDC).
Airflow-optimised interior for efficient air circulation.
Stopwatch.
Cooking timer for up to 99 minutes.
Short-term timer.
Memory function.
Options menu.
Power management.

Selected digital services (Gaggenau Home Connect)
Remote control and monitoring of ventilation.
Remote monitoring of cooking zones.
Remote diagnostics.

Product rating
Energy efficiency class A at a range of energy efficiency classes from A+++ to D.
Energy consumption 56.9 kWh/year.
Ventilation efficiency class A.
Illumination efficiency class -.
Grease filter efficiency class B.
Sound level min. 61 dB / max. 70 dB normal mode.

Safety
Main switch.
Operation indicator.
Pot detection.
2 stage Hh residual heat indicator for each zone
Child lock.
Safety shut-off.
Detachable, dishwasher-safe two-stage overflow protection.
Removable overflow container, 0,9-litre capacity, dishwasher-safe.

Planning notes
Bottom cabinet width: min. 60 cm.
Worktop depth: min. 60 cm with unducted recirculation, min. 65 cm with ducted recirculation/extraction.
Immersion depth 227 mm.
The unducted recirculation set CA 082 011 requires a vertical aperture of min. 25 mm behind the backpanel of the furniture.
Suggested for ideal performance are 50 mm.
The air outlet on the backside of the appliance can directly be accessed with a flat duct element (DN 150).
In air extraction a one-way flap with a maximum opening pressure of 65 Pa should be installed.
For optimum performance in air recirculation we recommend an outflow surface area of at least 400 cm².

Operates with magnetic (induction) iron pots and pans only. For an optimal heat distribution, the use of sandwich bottom cookware is recommended.
Special accessories (order as spare parts):
Part No. 17006018 Frying sensor pan, ø 20 cm
The equivalent ducting length to ensure good performance is Lmax 28 m.
Appliance must be fixed from underneath.
Appliance weight: approx. 27.
The appliance must be freely accessible from below.
When installing a ventilation hood with air extraction mode and a chimney-vented fireplace, the hood's power supply line needs to feature a suitable safety switch.
Installation is possible in worktops made of stone, synthetics or solid wood. Heat resistance and watertight sealing of the cut edges must be observed. Concerning other materials please consult the worktop manufacturer.
The bearing capacity and stability, in the case of thin worktops in particular, must be supported using suitable substructures. Take into account the appliance weight and additional loads.
The groove must be continuous and even, so that uniform placing of the appliance on the gasket is ensured. Do not use discontinuous lining.
Joint width may vary due to dimensional tolerances of the glass ceramic cooktop and the worktop cut-out.
Comply with the clearances from underneath the worktop to the overflow container: min. 300 mm to remove and empty the container.

Connection
Total connected load 7.4 KW.
Connecting cable 1.50 m without plug.
Power consumption standby/display off 0.5 W.
Power consumption standby/network 2 W.
Please check the user manual for how to switch off the WiFi module.

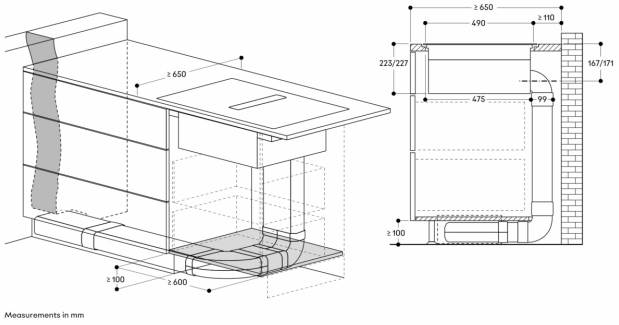

Side view with kit ducted air recirculation 700 mm worktop depth; flush installation

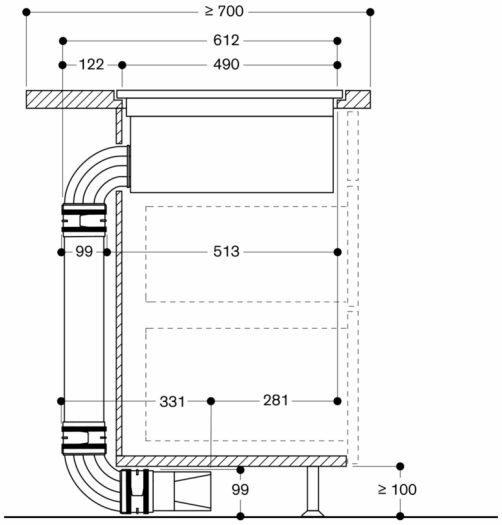

Not recommended for non-thermally insulated outer wall or floor (U ≥ 0.5 W/m²K)

Measurements in mm

Side view with kit ducted air recirculation 600 mm worktop depth; flush installation

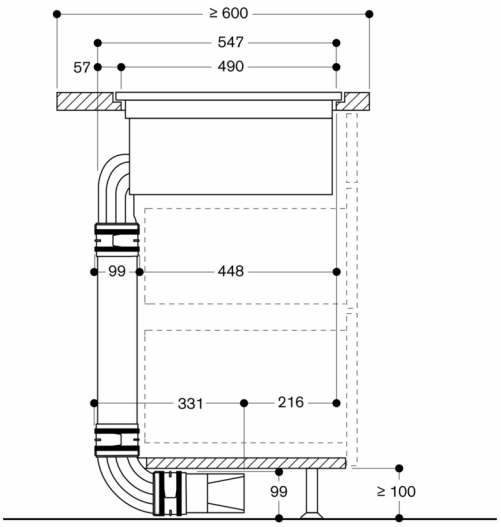

Not recommended for non-thermally insulated outer wall or floor (U ≥ 0.5 W/m²K)

Measurements in mm

Side view with unducted recirculation; flush installation

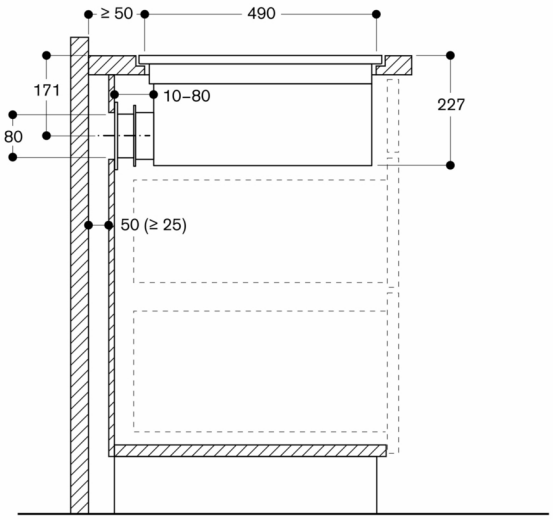

Not recommended for non-thermally insulated outer wall or floor (U ≥ 0.5 W/m²K)

Measurements in mm

View from above

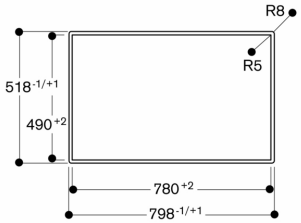

Cross section

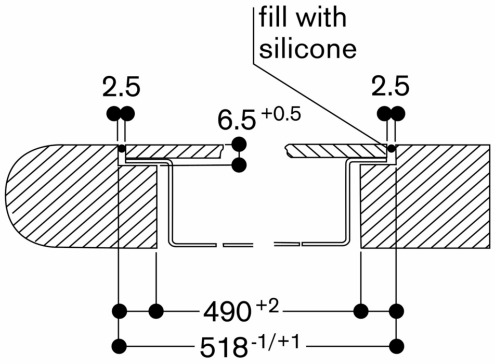

Longitudinal section

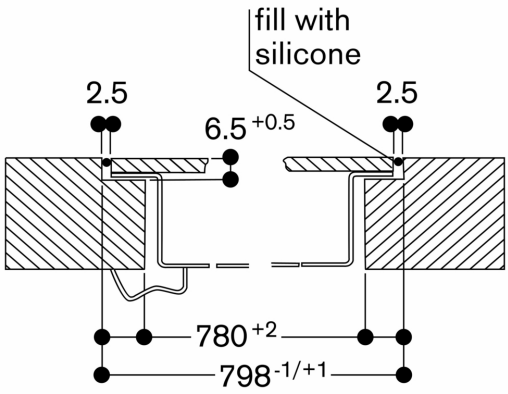

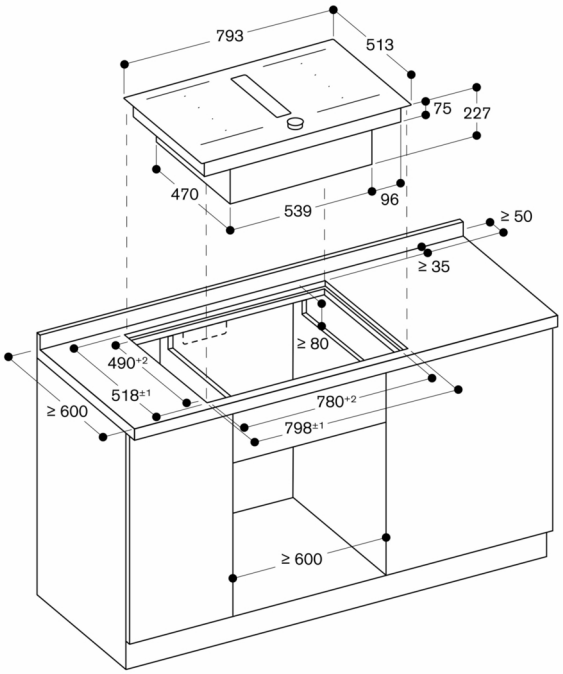

Measurements in mm

Front view

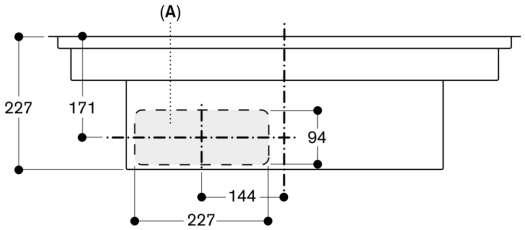

A: Connected directly at the rear

measurements in mm

Front view - furniture cut-out for unducted recirculation; flush installation

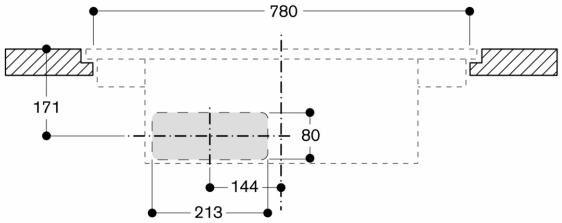

Measurements in mm

Front view of CV 282 with ducted recirculation

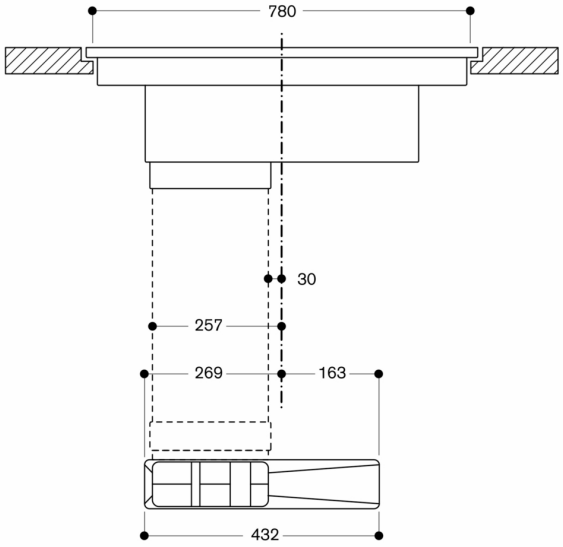

Measurements in mm

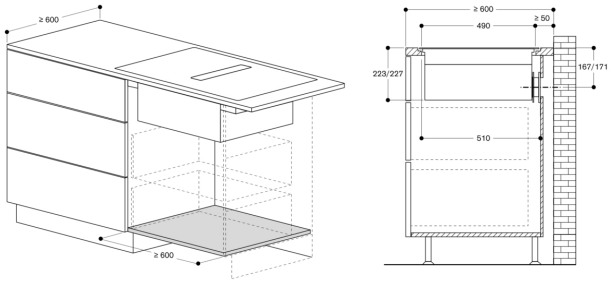

measurements in mm

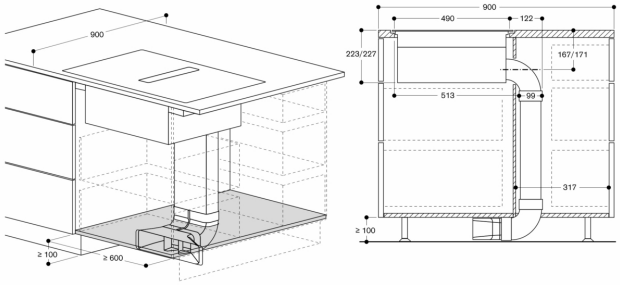

measurements in mm

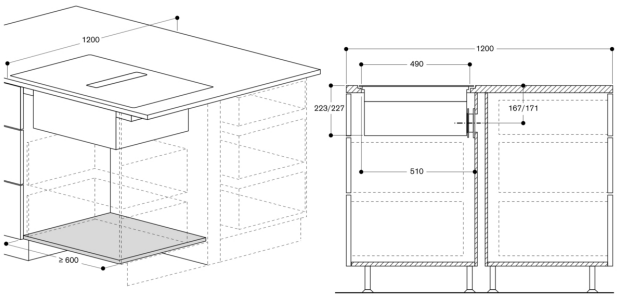

measurements in mm

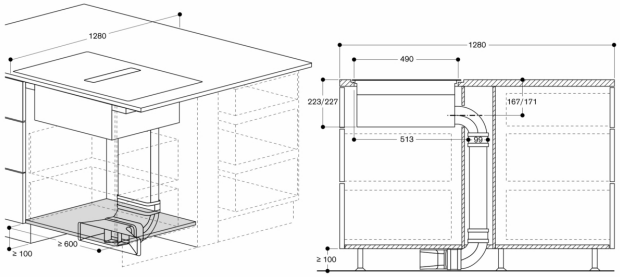

measurements in mm

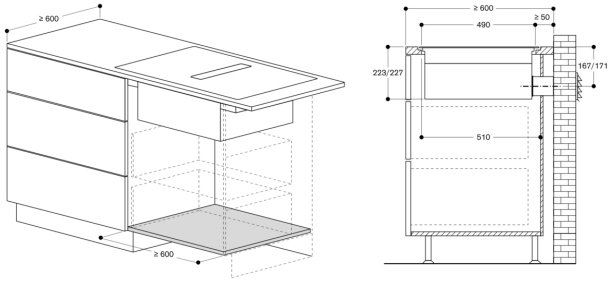

measurements in mm

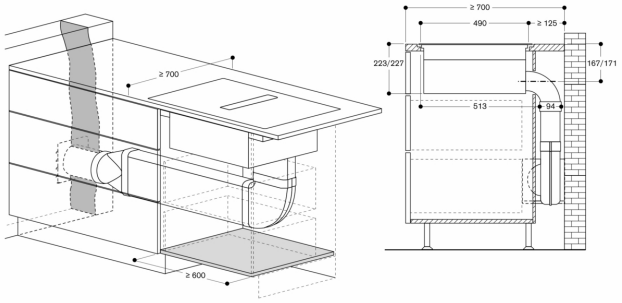

measurements in mm

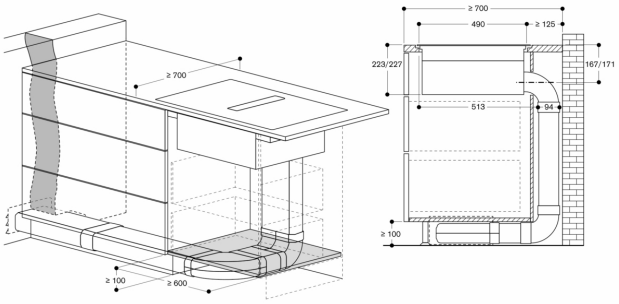

measurements in mm

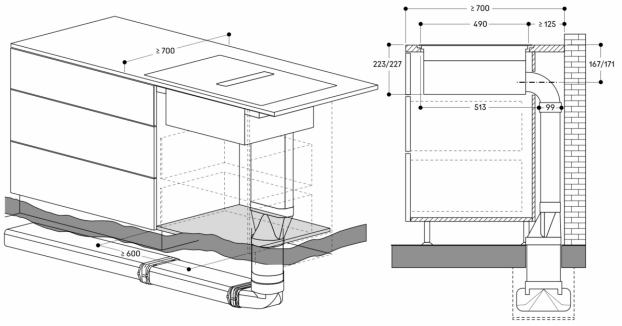

Measurements in mm

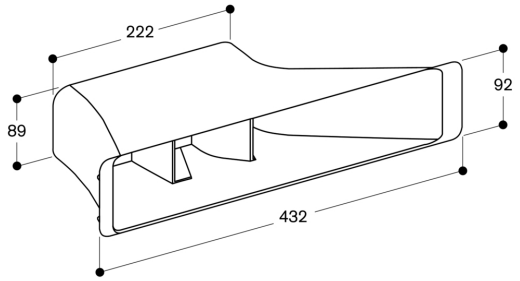

measurements in mm