CI272103

Optional accessories

CA050300:
Flex pan set, 3 pcs.

CA051301:
Teppan Yaki

CA052300:
Griddle Plate

CA055300:
Flex pan large

CA230100:
Magnetic knob, black

Flex induction cooktop 200 series
70 cm
CI272103

- Magnetic Twistpad in stainless steel or black
- Flex function for combining the rectangular cooking areas
- Professional cooking function for splitting the cooktop into predefined heat areas
- Flexible positioning of cookware
- Flush-Top Frame installation: seamless transition of hob and worktop makes cleaning easier and integrates the hob beautifullyFrameless for flush installation

Flex function for combining the rectangular cooking areas
Flexible positioning of cookware inside combined cooking areas with automatic extension up to 30 cm
Cooking sensor function for temperature control in pots
Professional cooking function for spliting the cooktop into 3 predefined heat areas
Frying sensor function for temperature control in pans
Twist-Pad control with removable magnetic knob
Easy control of all functions with two color displays

Cooking zones

2 flex induction cooking areas 23x19 cm (2200 W, with booster 3700 W), linked together 23x38 cm (3300 W, with booster 3700 W), with automatic extension up to 30x30 cm (3300 W, with booster 3700 W).
2 flex induction cooking areas 23x19 cm (2200 W, with booster 3700 W), linked together 23x38 cm (3300 W, with booster 3700 W), with automatic extension up to 30x30 cm (3300 W, with booster 3700 W).

Handling

Twist-Pad control with removable magnetic knob.
User friendly control with two color display (white / orange).
Cooking zone, and cooking area marking.
Electronic power control in 17 output levels.

Features

Flex function for rectangular cooking areas.
Professional cooking function.
Cooking sensor function (in use with cooking sensor CA 060 300).
Frying sensor function.
Booster function for pots.
Booster function for pans.
Keep warm function.
Stopwatch.
Cooking timer for up to 99 minutes.
Short-term timer.
Options menu.
Power management.

Selected digital services (Gaggenau Home Connect)

Cooktop-based ventilation control (with suitable hood).
Remote monitoring.
Remote diagnostics.
Integrated WiFi module for digital services (Home Connect).

The availability of the Home Connect functionality depends on the availability of the Home Connect Services in your country. Home Connect Services are not available in every country – for further information please check: www.home-connect.com

Safety

Main switch.
Operation indicator.
Pot detection.
2 stage Hh residual heat indicator for each zone
Child lock.
Safety shut-off.

Planning notes

Installation is possible in worktops made of stone, synthetics or solid wood. Heat resistance and watertight sealing of the cut edges must be observed. Concerning other materials please consult the worktop manufacturer.
Operates with magnetic (induction) iron pots and pans only. For an optimal heat distribution, the use of sandwich bottom cookware is recommended.
Special accessories (order as spare parts):
Part No. 17006018 Frying sensor pan, ø 14 cm (bottom) / 20 cm (top)
Part No. 17006019 Frying sensor pan, ø 28 cm (bottom) / 32 cm (top)
The wok pan WP 400 001 cannot be used with this appliance.
Appliance must be fixed from underneath.
Appliance weight: approx. 15.

Connection

Total connected load 7.4 KW.
Connecting cable 1.10 m without plug.
Power consumption standby/display off 0.5 W.
Power consumption standby/network 2 W.
Please check the user manual for how to switch off the WiFi module.

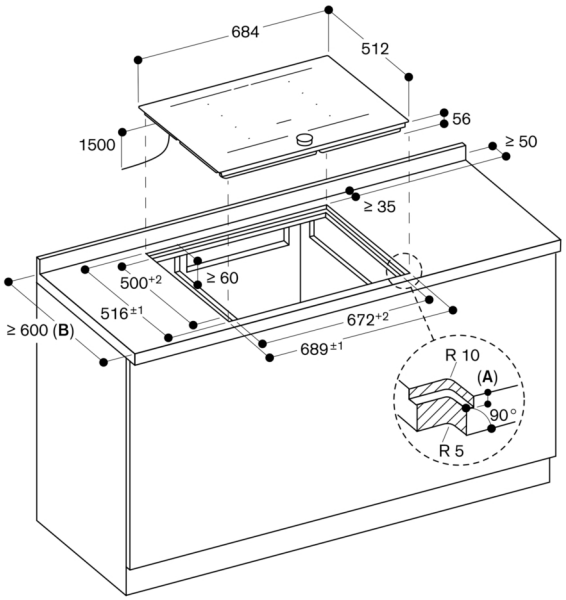

A: $6.5^{+0.5}$
B: Please check the installation manual if the worktop depth is less than 600 mm.

measurements in mm

Cross-section

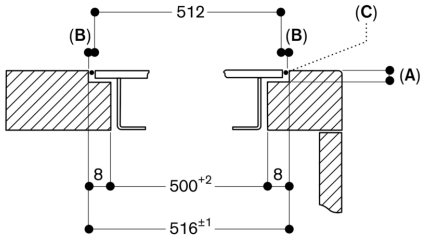

A: $6.5^{+0.5}$
B: 2.5
C: Fill with silicone

measurements in mm

View from above

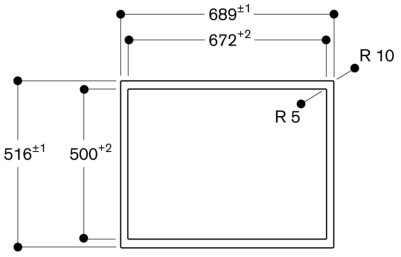

measurements in mm

Longitudinal section

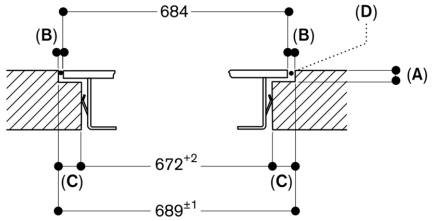

A: $6.5^{+0.5}$
B: 2.5
C: 8.5
D: Fill with silicone

measurements in mm