BSP221111

Included accessories

1 x grid
1 x STS tray
punched
40 mm deep
1 x STS tray
unpunched
40 mm deep

Optional accessories

BA220360:
Container st. steel unperf for BSP22*

BA220370:
Container st.steel perf for BSP22*

GN114130:
GN insert unperf, st. steel, GN1/3, 40mm

GN114230:
GN insert unperf, st. steel, GN2/3, 40mm

GN124130:
GN insert perf, st. steel, GN1/3, 40mm

GN124230:
GN insert perf, st. steel, GN2/3, 40mm

Steam oven 200 series
60 x 45 cm, door hinge: left, Gaggenau Metallic
BSP221111

- Flush installation
- Water tank for fresh and waste waterFlush installation

Water tank
Large cavity
LED light source
External steam generation
Steaming without pressure with 100% humidity from 30 °C to 100 °C
Sous-vide cooking with accurate temperature regulation
TFT touch display
Panel-free appliance with surface control module
Electronic temperature control from 30 °C to 100 °C
59 litres net volume

Heating methods
100 % humidity.
Sous-vide cooking.
Dough proofing.
Defrosting.
Regenerating.
Low temperature steaming.

Handling
Rotary knob and TFT touch display operation.
Clear text display.
Personalisation of automatic programmes.
Information key with use indications.
Side-opening door opens up to 110° angle.

Features
Removable 1.7 litre water tank.
Water level warning.
Actual temperature display.
Timer functions: cooking time, cooking time end, timer, stopwatch, long-term timer (certified by Star-K).
Automatic boiling point detection.
LED light on the side.
Hygienic stainless steel cooking interior.
3 tray levels.

Selected digital services (Gaggenau Home Connect)
Remote control and monitoring.
Recipes.
Home network integration for digital services (Home Connect) either via cable connection LAN (recommended) or wireless via WiFi.
The availability of the Home Connect functionality depends on the availability of the Home Connect Services in your country. Home Connect Services are not available in every country – for further information please check: www.home-connect.com

Safety
Child lock.
Safety shut-off.
Cooled housing with temperature protection.

Cleaning
Cleaning aid.
Descaling programme for the steam generator.

Planning notes
Door hinge not reversible.
No other electrical appliances should be installed above the BS.
The door panel surface of the appliance extends 21 mm from the furniture cavity.
The outer edge of the door handle extends 72 mm from the furniture cavity.
Necessary lateral gap between appliance door and furniture panel of min. 5 mm.
Consider the overhang, incl. the door handle, when planning to open drawers next to the appliance.
When planning a corner solution, pay attention to the side-opening door and the minimum required distance to the wall.
The main socket needs to be planned outside of the niche.
The LAN port can be found at the back on the lower left side.
Special accessories (order as spare part):
Part No. 17002490 Descaling tablets.

Connection
Total connected load 2.8 KW.
Connecting cable 1.8 m with plug.
Plan a LAN cable.
Power consumption standby/display on 0.8 W.
Power consumption standby/display off 0.5 W.
Power consumption standby/network 1.8 W.
Time auto-standby/display on 20 min.
Time auto-standby/display off 20 min.#
Time auto-standby/network 20 min.
Please check the user manual for how to switch off the WiFi module.

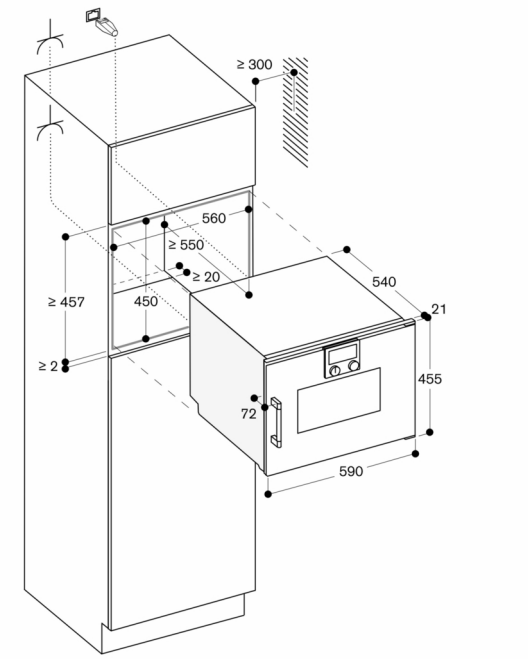

Socket

measurements in mm

Side view of BSP 220/250 above BOP

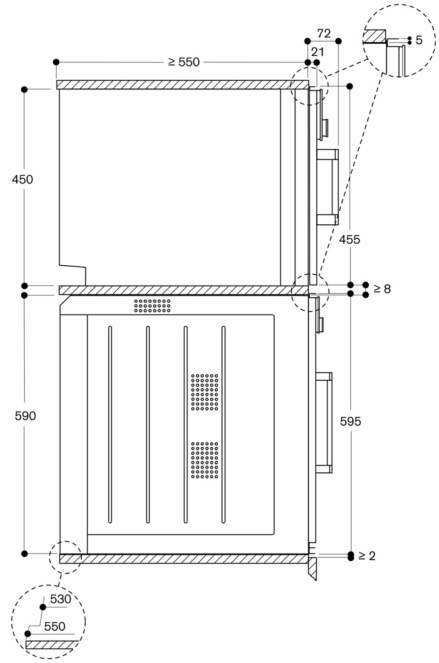

measurements in mm