BS474102

Included accessories

1 x outlet hose 3m
1 x STS tray-GN2/3-punched-40 mm deep
1 x STS tray-GN2/3-unpunched-40 mm deep
1 x grid
1 x pluggable meat probe
1 x water inlet hose 3m
1 x STS tray punched 40 mm deep
1 x STS tray unpunched 40 mm deep
1 x cleaning cartridge

Optional accessories

BA010301:
1 Triple pull-out rail for combi-steam

BA020361:
Container st. steel unperf

BA020370:
Container st.steel perf

CLS10040:
Cleaning cartridge, 4 pcs.

GN010330:
GN-adapter

GN114130:
GN insert unperf, st. steel, GN1/3, 40mm

GN114230:
GN insert unperf, st. steel, GN2/3, 40mm

GN124130:
GN insert perf, st. steel, GN1/3, 40mm

GN124230:
GN insert perf, st. steel, GN2/3, 40mm

GZ010011:
inlet and outlet hose extention

combi-steam oven 400 series
60 x 45 cm, door hinge: right, Gaggenau Anthracite
BS474102

- Handleless door / automatic door opening
- Combination of hot air and steam
- Fixed inlet and outlet water connectionHandleless door / automatic door opening / door opening via voice assistant possible

Fixed inlet and outlet water connection
Cleaning system, fully automatic
Large cavity
2 LED light sources
External steam generation
Steaming without pressure
Hot air 30 °C to 230 °C can be combined with chosen humidity level of 0%, 30%, 60%, 80% or 100%
Sous-vide cooking with accurate temperature regulation
Full surface grill behind glass ceramic, combinable with circulated air up to 230 °C and steam
Automatic programmes
Core temperature probe with estimation of cooking time
Hot air fan rotates in both directions for ideal heat distribution
TFT touch display
Panel-free appliance with surface control module
Electronic temperature control from 30 °C to 230 °C
50 litres net volume

Heating methods
Hot air + 100 % humidity.
Hot air + 80 % humidity.
Hot air + 60 % humidity.
Hot air + 30 % humidity.
Hot air + 0 % humidity.
Low temperature cooking.
Sous-vide cooking.
Full surface grill level 1 + humidity.
Full surface grill level 2 + humidity.
Full surface grill + circulated air.
Dough proofing.
Defrosting.
Regenerating.

Handling
Automatic door opening.
Rotary knob and TFT touch display operation.
Clear text display.
Option to save individual recipes (incl. core temperature probe).
Personalisation of automatic programmes.
Information key with use indications.
Side-opening door opens up to 180° angle.

Features
Full surface grill 2 kW behind glass ceramic.
Steam removal.
Misting.
Three-point core temperature probe with automatic shut-off and estimation of cooking time.
Automatic programmes.
Actual temperature display.
Timer functions: cooking time, cooking time end, timer, stopwatch, long-term timer (certified by Star-K).
Automatic boiling point detection.
Capacity display for filter cartridge (if connected to GF 111 100 descaling system).
2 x LED light on the side.
Hygienic stainless steel cooking interior.
3 tray levels.

Selected digital services (Gaggenau Home Connect)
Door opening via voice assistant.
Automatic programmes.
Remote control and monitoring.
Recipes.
Home network integration for digital services (Home Connect) either via cable connection LAN (recommended) or wireless via WiFi.
The availability of the Home Connect functionality depends on the availability of the Home Connect Services in your country. Home Connect Services are not available in every country – for further information please check: www.home-connect.com

Safety
Child lock.
Safety shut-off.
Cooled housing with temperature protection.

Cleaning
Cleaning programme, fully automatic.
Descaling programme for the steam generator.
Drying programme.
Automatic drying of the cavity at the end of the cooking process.
Strainer filter, removable.
Demo cleaning programme.

Planning notes
Door hinge not reversible.
No other electrical appliances should be installed above the BS.
At no point may the outlet hose be positioned higher than the bottom edge of the appliance. The outlet hose must also be at least 100 mm lower than the appliance outlet (see drawing "drain connection").
Inlet hose can be extended once.
The outlet hose must not be longer than a maximum of 5 m.
The water connection for the inlet hose must always be accessible and not located directly behind the appliance.
The connection of the outlet hose to the siphon must not be directly behind the appliance and should be accessible.
The descaling system GF 111 100 (3) may be installed when connecting the appliance if the water hardness exceeds 7° dH.
The façade of the appliance extends 47 mm from the furniture cavity.
Consider the overhang when planning to open drawers next to the appliance.
When planning a corner solution, pay attention to the side-opening door and the minimum required distance to the wall.
The main socket needs to be planned outside of the niche.
Special accessories (order as spare part):

Part No. 17002490 Descaling tablets.

Connection

Energy efficiency class A at a range of energy efficiency classes from A+++ to D.
Total connected load 3.1 KW.
Only cold water connection.
Inlet hose 3.0 m with connection pipe thread ISO228-G 3/4'' (Ø 26.4 mm), extendable.
Outlet hose (Ø 25 mm) 3.0 m (HT-Hose).
Connecting cable 1.8 m with plug.
Plan a LAN cable.
Power consumption standby/display on 0.8 W.
Power consumption standby/display off 0.5 W.
Power consumption standby/network 1.8 W.
Time auto-standby/display on 20 min.
Time auto-standby/display off 20 min.#
Time auto-standby/network 20 min.
Please check the user manual for how to switch off the WiFi module.

Side view of BS 474/475 above BO

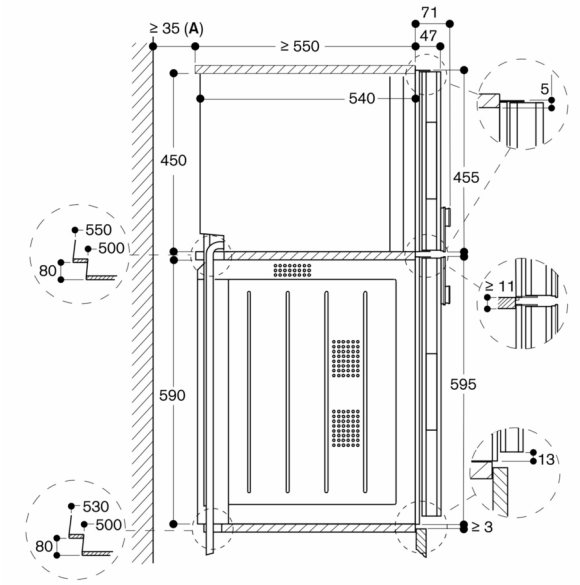

A:Only required if the water hoses for the BS steam oven cannot be accommodated in the corner recesses of the appliances.

measurements in mm

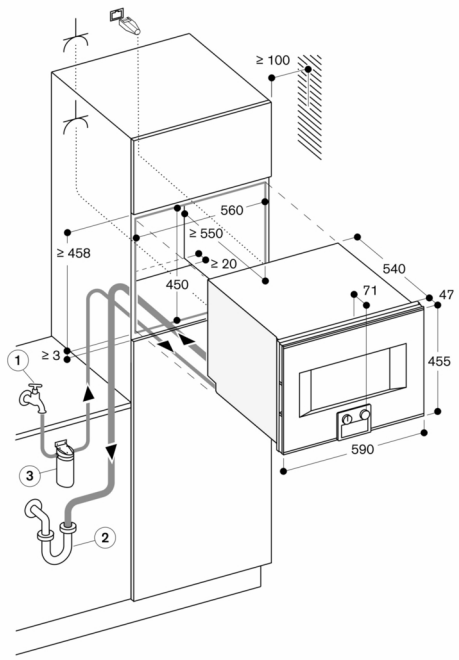

⅄ Socket

measurements in mm

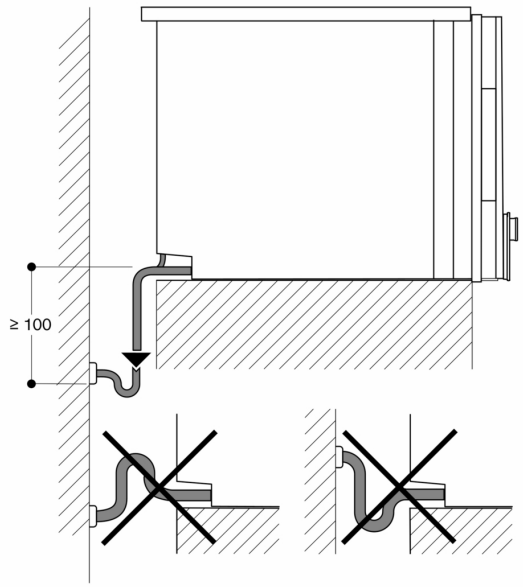

measurements in mm

View from rear

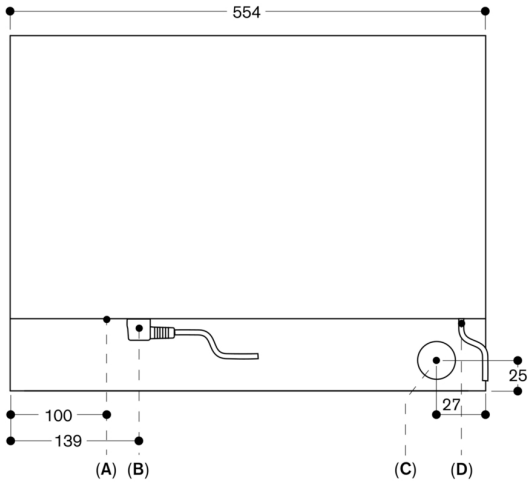

A:LAN connection
B:Electric terminal box
C:Water outlet
D:Cold water inlet

measurements in mm