BO470102

Included accessories

2 x enamel baking tray,suit. pyrolitic clean
1 x rotary spit
1 x glass pan
1 x grill shelf
1 x grill tub with grid
1 x pluggable meat probe

400 series
60 x 60 cm, door hinge: right, Gaggenau Anthracite
BO470102

- Handleless door / automatic door opening
- Pyrolitc cleaning programme heats up to 485 °C
- 17 heating methods with core temperature probe, rotisserie spit and baking stone function
- Automatic programmes
- 76 litres net volume
- Handleless door / automatic door opening / door opening via voice assistant possible

Pyrolytic system
17 heating methods, with core temperature probe, rotisserie spit and baking stone function
Automatic programmes
Core temperature probe with estimation of cooking time
TFT touch display
Panel-free appliance with surface control module
Electronic temperature control from 30 °C to 300 °C
76 litres net volume

Heating methods

Hot air.
Eco hot air.
Top + bottom heat.
Top + 1/3 bottom heat.
Top heat.
1/3 top + bottom heat.
Bottom heat.
Hot air + bottom heat.
Hot air + 1/3 bottom heat.
Full surface grill + circulated air.
Full surface grill.
Compact grill.
Baking stone function.
Roaster function.
Dough proofing.
Defrosting.
Keeping warm.

Handling

Automatic door opening.
Rotary knob and TFT touch display operation.
Clear text display.
Option to save individual recipes (incl. core temperature probe).
Personalisation of automatic programmes.
Information key with use indications.
Side-opening door opens up to 180° angle.

Features

Three-point core temperature probe with automatic shut-off and estimation of cooking time.
Automatic programmes.
Rotisserie spit.
Baking stone socket.
Actual temperature display.
Rapid heating.
Timer functions: cooking time, cooking time end, timer, stopwatch, long-term timer (certified by Star-K).
60 W halogen light on the top.
2 x 10 W halogen light on the side.
Enamelled side shelf supports with 3 tray levels, pyrolysis-safe.

Selected digital services (Gaggenau Home Connect)

Door opening via voice assistant.
Automatic programmes.
Remote control and monitoring.
Recipes.
Home network integration for digital services (Home Connect) either via cable connection LAN (recommended) or wireless via WiFi.
The availability of the Home Connect functionality depends on the availability of the Home Connect Services in your country. Home Connect Services are not available in every country – for further information please check: www.home-connect.com

Safety

Thermally insulated door with quadruple glazing.
Child lock.
Safety shut-off.
Cooled housing with temperature protection.

Cleaning

Pyrolytic system.
Gaggenau enamel.
Heated air cleaning catalyser.

Planning notes

Door hinge not reversible.
The façade of the appliance extends 47 mm from the furniture cavity.
Consider the overhang when planning to open drawers next to the appliance.
When planning a corner solution, pay attention to the side-opening door and the minimum required distance to the wall.
To achieve the 550 mm installation depth, the connection cable needs to follow the slanted edge on the lower right hand corner of the housing.
The main socket needs to be planned outside of the niche.
The LAN port can be found at the back on the upper right side.

Connection

Energy efficiency class A at a range of energy efficiency classes from A+++ to D.
Total connected load 3.7 KW.
Plan a connection cable.
Plan a LAN cable.
Power consumption standby/display on 0.7 W.
Power consumption standby/display off 0.5 W.
Power consumption standby/network 1.4 W.
Time auto-standby/display on 20 min.
Time auto-standby/display off 20 min.#
Time auto-standby/network 20 min.
Please check the user manual for how to switch off the WiFi module.

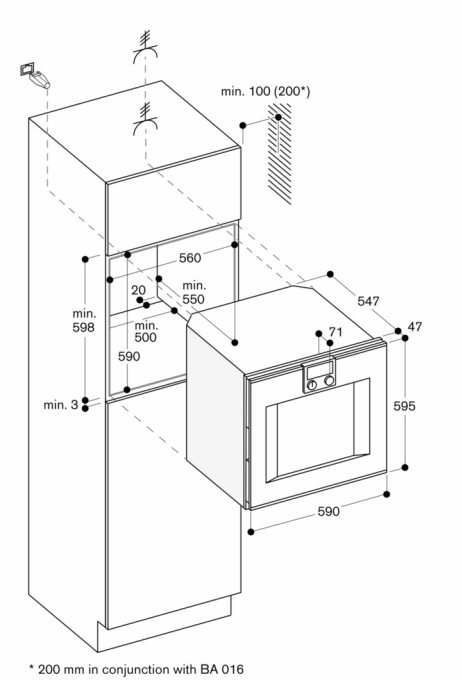
min. 100 (200*)
560
20
min.
550
547
min.
598
min.
500
71
47
590
min. 3
595
590
* 200 mm in conjunction with BA 016