AW442120

installation accessories

AA442810:
Recirculation module w.active charcoal

AD442012:
Chimney exhaust air stainless steel

AD442022:
Chimney exhaust air stainless steel

AD442112:
Chimney recirculation stainless steel

AD442122:
Chimney recirculation stainless steel

Wall-mounted hood 400 series
120 cm, Stainless steel
AW442120

- Perfect Integration with Vario Cooktops 400 series
- Highly efficient extraction of cooking vapours due to large vapour collection area
- Function for automatic, sensor-controlled power adjustment depending on the build-up of cooking vapours
- Motorless, can be combined with Gaggenau BLDC remote fan unitsProfessional technology hood combined with classic Gaggenau design

Highly efficient extraction of cooking vapours due to large vapour collection area
Motorless, can be combined with Gaggenau BLDC remote fan units
Angled baffle filter with high grease absorption
Function for automatic, sensor-controlled power adjustment depending on the build-up of cooking vapours
Dimmable, neutral white surface LED light for ideal illumination of the whole cooktop
Air extraction or recirculation system
Recirculation module with activated charcoal filter: Silent and highly efficient air recirculation solution with odour reduction compareable to air extraction and long replacement intervals

Output
Power levels depend on the remote fan unit.

Features
Three electronically controlled power levels and an intensive mode.
Automatic function with sensor-controlled run-on function.
Grease filter saturation indicator.
Baffle filter, dishwasher-safe.
Neutral white surface LED light (3500 K), continuously dimmable.
Lamp output 3 x 10 W.
Illuminance: 940 lx
Easy mounting system for simple installation and alignment.

Product rating
Consumption data is referred to a configuration with the remote fan unit AR 400 143.
Energy efficiency class A at a range of energy efficiency classes from A+++ to D.
Energy consumption 48.1 kWh/year.
Ventilation efficiency class A.
Illumination efficiency class B.
Grease filter efficiency class B.
Sound level min. 47 dB / max. 64 dB normal mode.

Planning notes
Refer to the table in Models & Dimensions for the matching remote fan units for air recirculation or air extraction mode.
Two chimney lengths are available depending on the height of the room.
The AR 400 143 remote fan unit is ideal for space-saving installation for assembly in the AW 442.
Connection to the respective appliances via network cable.
Clearance above gas appliances min. 70 cm.
Clearance above electric appliances min. 60 cm.
Air recirculation module with 2 activated charcoal filters is installed in the inner chimney. Special air recirculation chimneys are available for this.
When installing a ventilation hood with air extraction mode and a chimney-vented fireplace, the power supply line of the ventilation appliance needs a suitable safety switch.

Connection
Total connected load 40 W.
Connecting cable 1.8 m, pluggable.

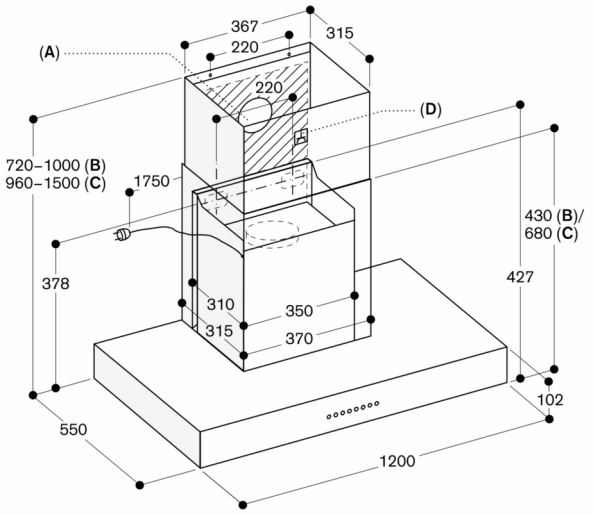

A: Air extraction outlet
B: With air extraction chimney AD 442 012, suitable for ceiling heights from 2.35 m to 2.60 m
C: With air extraction chimney AD 442 022, suitable for ceiling heights from 2.60 m to 3.10 m; Specifications refer to the distance of 1.60 m from the floor to the lower edge of the hood

D: Socket

Measurements in mm

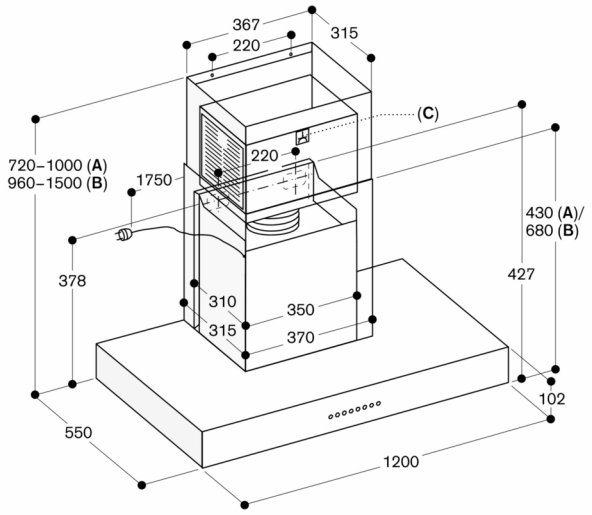

A: With air recirculation chimney AD 442 112, suitable for ceiling heights from 2.35 m to 2.60 m
B: With air recirculation chimney AD 442 122, suitable for ceiling heights from 2.60 m to 3.10 m; Specifications refer to the distance of 1.60 m from the floor to the lower edge of the hood

C: Socket

Measurements in mm