AW290110

Optional accessories

AA290800:
Air recirculation module

200 series
90 cm, Stainless steel look
AW290110

- Perforated stainless steel grease filters with high grease absorption rate
- Function for automatic, sensor-controlled power adjustment depending on the build-up of cooking vapours

Highlights

Glass user interface with surrounding aluminium frame.
Dimmable, neutral white LED light.

Output

Performance and noise level, output level 3/Intensive:
Air output according to EN 61591.
Sound power level according to EN 60704-3.
Air extraction:
396 / 946m³/h.
57 / 76 dB (A) re 1 pW.
Air recirculation:
406 / 888m³/h.
64 / 78 dB (A) re 1 pW.

Features

Three electronically controlled power levels and an intensive mode.
Perforated sheet metal filter, dishwasher-safe.
Neutral white LED light (3500 K).
Light colour in different white tones (2700 - 5000 Kelvin) can be adjusted via Home Connect.
Illuminance 461 lx continuously dimmable.
Lamp output 2 x 3 W.
Fan technology with brushless DC motor (BLDC).
Interval ventilation via Gaggenau Home Connect.
Grease filter and odour filter saturation indicator via Gaggenau Home Connect.

Selected digital services (Gaggenau Home Connect)

Cooktop-based ventilation control (with suitable cooktop).
Remote control and monitoring.
Software updates.
Remote diagnostics.

Product rating

Energy efficiency class A+ at a range of energy efficiency classes from A+++ to D.
Energy consumption 34.5 kWh/year.
Ventilation efficiency class A.
Illumination efficiency class A.
Grease filter efficiency class B.
Sound level min. 43 dB / max. 57 dB normal mode.

Planning notes

The equivalent ducting length to ensure good performance is Lmax 26 m.
Please refer to the "General planning notes" for the calculation of the equivalent ducting length.
The package includes the two-part chimney.
Total appliance height from 635 mm to 895 mm.
Clearance above gas appliances min. 65 cm(more than total load gas 12 kW min. 70 cm).
Clearance above electric appliances min. 55 cm.
For air recirculation, an air recirculation module is required.
Air recirculation module with 1 odour filter and special recirculation chimney. Total appliance height from 803 mm to 1080 mm.
Easy planning and installation of the air recirculation module in the hood.
Easy access to odour filter from below.
When installing a ventilation hood with air extraction mode and a chimney-vented fireplace, the hood's power supply line needs to feature a suitable safety switch.

Connection

Total connected load 240 W.
Connecting cable 1.3 m with plug.

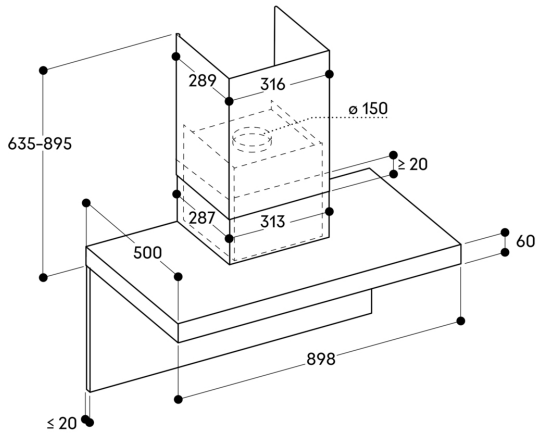

Measurements in mm

AW 290 with AA 290 800

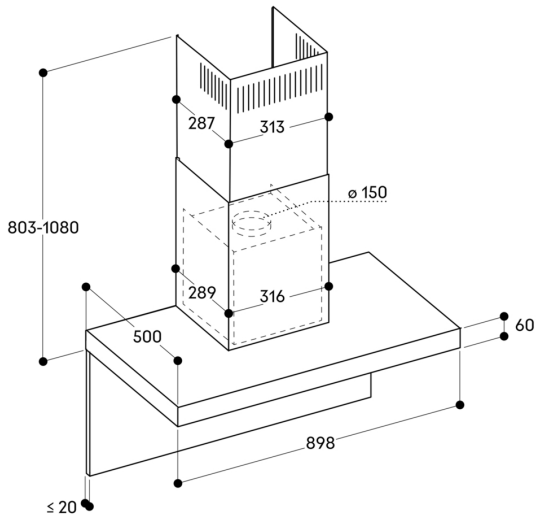

Measurements in mm

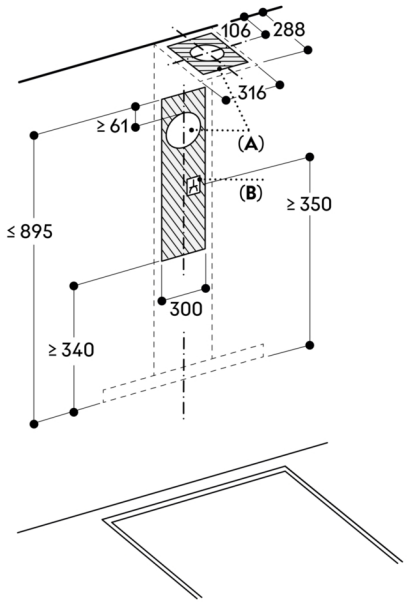

A: Exhaust air outlet D160
B : Accessible electrical connection

Measurements in mm

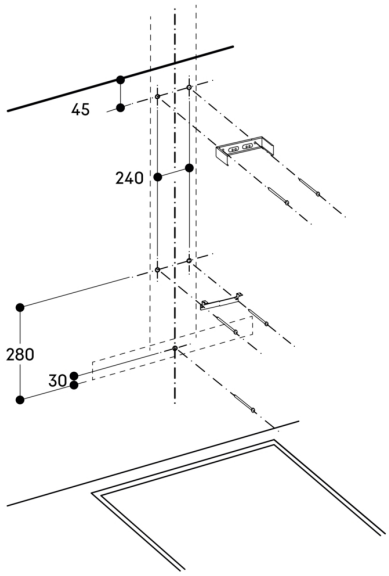

Measurements in mm