AL200190

Optional accessories

AA200890:
Air recirculation module 90cm

AA200892:
Regenerable air recircul. module 90cm

installation accessories

AA200910:
Installation kit remote motor

VA200090:
Installation kit (seamless combin.) 90cm

Table ventilation 200 series
90 cm, flush installation
AL200190

- When not in use it can be completely lowered into the worktop blends elegantly into worktop
- Transparent ventilation screen for discreet integration in the kitchen space
- Guided Air technology ensures high vapour catch rate across the whole cooktop
- Perfect cooking and ventilation combination with frameless induction cooktops
- Ambient Lighting Through Glass EdgesTelescopic table ventilation for combination with all Gaggenau cooktops, completely retractable when not in use

Perfect cooking and ventilation combination with frameless induction cooktops 90 cm wide for flush mounting in a single worktop cut-out
Transparent ventilation screen for discreet integration in the kitchen space
Ambient lighting through the glass edges
Guided Air technology ensures high vapour catch rate across the whole cooktop

Output

Performance and noise level, output level 3/Intensive:
Air output according to EN 61591.
Sound power level according to EN 60704-3.
Air extraction:
519 / 833m³/h.
62 / 71 dB (A) re 1 pW.
Air recirculation (with standard activated filters):
472 / 620m³/h.
65 / 71 dB (A) re 1 pW.

Features

White ambient lighting thru the glass edges, which can be changed to any color via the Home Connect App.
Automatic function with sensor-controlled run-on function.
Three electronically controlled power levels and an intensive mode.
Grease filter saturation indicator.
Activated charcoal filter saturation indicator.
2 large-scale metal grease filters included, easy to remove, dishwasher-safe.
Overflow capacity 170 ml in grease filter. Additional capacity 600 ml in the remote fan unit.
Activated charcoal filter easily removeable from above for air recirculation system.
Gaggenau Black anodized aluminium frame.
1 user interface to set the power levels and 1 user interface to control the Guided Air technology.
Fan technology with highly efficient, brushless DC motor.
Flexible installation of the fan unit at the front (for a compact wall solution), at the back (without loss of drawer space), or at a distance from the appliance.

Selected digital services (Gaggenau Home Connect)

Cooktop-based ventilation control (with suitable cooktop).
Remote control and monitoring.
Remote diagnostics.
Integrated WiFi module for digital services (Home Connect).
The availability of the Home Connect functionality depends on the availability of the Home Connect Services in your country. Home Connect Services are not available in every country – for further information please check: www.home-connect.com

Product rating

Energy efficiency class A at a range of energy efficiency classes from A+++ to D.
Energy consumption 37.8 kWh/year.
Ventilation efficiency class A.
Illumination efficiency class -.
Grease filter efficiency class C.
Sound level min. 41 dB / max. 62 dB normal mode.

Planning notes

The equivalent ducting length to ensure good performance is Lmax 28 m.
Compatible with frameless cooktops 400 series (CX 492) or 200 series (CI 292), in a single worktop cut-out for flush mounting.
For installation in a single worktop cut-out the installation accessory VA 200 090 must be placed between the appliances. This includes a connection strip and furniture supports that ensure cabinet stability.
Compatible with induction cooktops 400 series (CX 492 / VI 492) or 200 series (CI 292), in two separate worktop cut-outs for surface mounted installation.
Please refer to the cooktop installation details regarding air ducting.
For surface mounted installation the accessory AA 200 900 is required.
The table ventilation can be installed in the cabinet or between two (e.g. for an island installation deeper than 100 cm).
Width of the cabinets 90 cm, 100 cm or 120 cm.
No upper cabinets should be installed above the table ventilation to maintain optimum performance.
The following distance should be observed:
- 65 cm from the table ventilation to open shelves.
- 50 cm left and right of the table ventilation to the wall or neighbouring tall cabinets.
- 5 cm from the table ventilation frame to the wall.
- 2 cm from the Guided Air suction area to a cabinet wall.
Installation is possible in worktops made of stone, synthetics or solid wood. Heat resistance and watertight sealing of the cut edges must be observed. Concerning other materials please consult the worktop manufacturer.
Worktop thickness recommended for flush installation in a single worktop cut-out: 16 - 45 mm with CX 492, 30 - 45 mm with VI 492.
The bearing capacity and stability, in the case of thin worktops in particular, must be supported using suitable substructures. Take into account the appliance weight and additional loads.
Whatever installation situation, the fan unit should always be accessible.
To install the fan unit at a distance, the installation kit AA 200 910 is required (with spare covers for closing air outlets). Maximum distance between the table ventilation and the fan unit 3 m.

In air extraction a one-way flap with a maximum opening pressure of 65 Pa should be installed.
In air extraction mode, always ensure adequate fresh air in the room if the appliance is being operated at the same time as a chimney-vented fireplace.
For optimum performance in air recirculation we recommend an outflow surface area of at least 400 cm^2.
For air recirculation, an air recirculation module is required.

Connection

Total connected load 300 W.
Connecting cable 1.3 m with plug.
Power consumption standby/display off 0.4 W.
Please check the user manual for how to switch off the WiFi module.

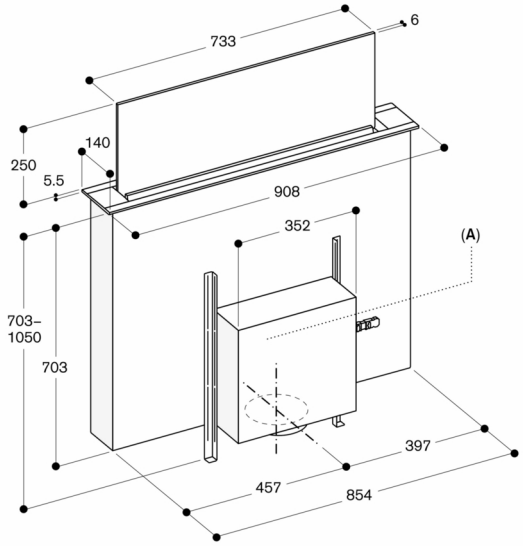

A: Flexible installation of the fan unit at the front, at the back or at a distance from the appliance (installation kit required - max. distance 3 m)

Fan unit must always be accessible

In recirculation: Not recomended for non-thermally insulated outer wall or floor (U ≥ 0.5 W/m²K)

Measurements in mm

AL 200 in combination with frameless cooktop CX 492 / CI 292 in a single cut-out

Flush installation

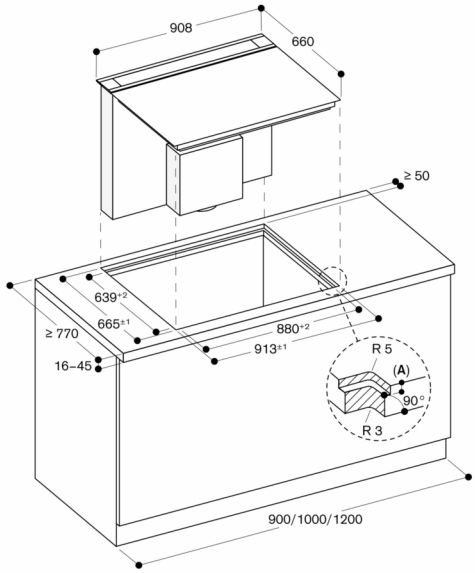

A: $6.5^{+0.5}$ mm

Measurements in mm

AL 200 in combination with frameless cooktop CX 492 / CI 292 in a single cut-out

Flush installation
View from above

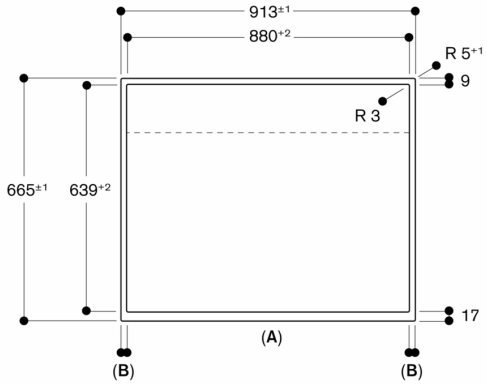

A: Front
B: 16.5 mm

Measurements in mm

AL 200 in combination with frameless cooktop CX 492 / CI 292 in a single cut-out

Flush installation
Cross section

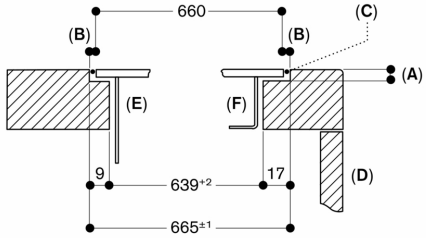

A: $6.5^{+0.5}$ mm
B: 2.5 mm
C: Fill with silicone
D: Front
E: Table ventilation
F: Induction cooktop

Measurements in mm

AL 200 in combination with frameless cooktop CX 492 / CI 292 in a single cut-out

Flush installation
Longitudinal section

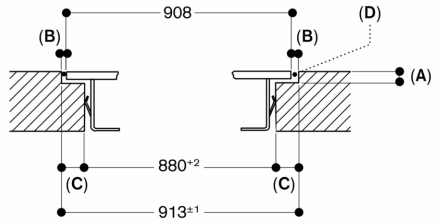

A: $6.5^{+0.5}$ mm
B: 2.5 mm
C: 16.5 mm
D: Fill with silicone

Measurements in mm

AL 200 in combination with frameless hob in 2 separate cut-outs

Surface installation

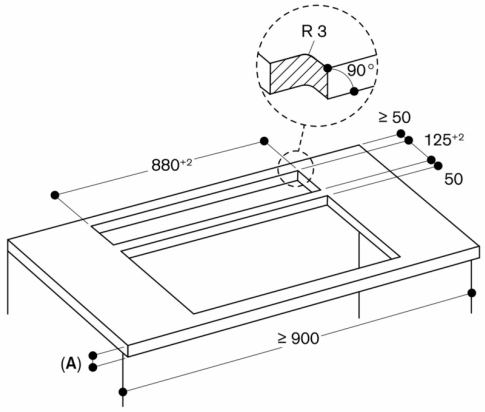

A: Min. worktop thickness - refer to related cooktop installation notes

Max. worktop thickness 45 mm

Measurements in mm

AL 200 in combination with induction cooktop in 2 separate cut-outs
View from above

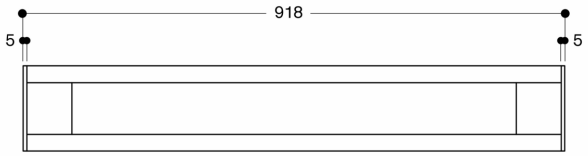

Measurements in mm

AL 200 in combination with frameless induction cooktop in 2 separate cut-outs
Flush installation

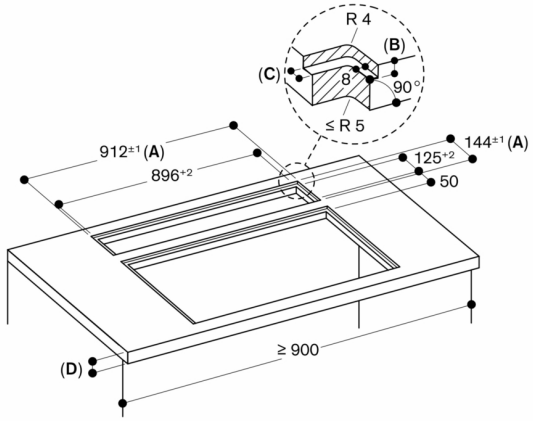

A: Incl. 2 mm silicone joint all around
B: 5.5 mm
C: 9.5 mm
D: Min. worktop thickness - refer to related cooktop installation notes

Max. worktop thickness 45 mm

Measurements in mm

AL 200 in combination with induction cooktop in 2 separate cut-outs
Side view

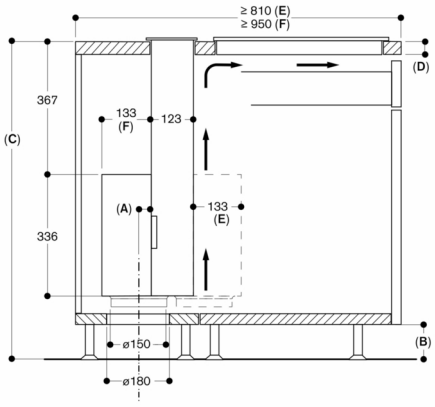

A: ≥ 20 mm from the Guided Air suction area to a cabinet wall

B: ≥ 60 mm for air recirculation
≥ 100 mm for air extraction with ducting in the plinth

C: ≥ 850 mm for air extraction with ducting in the plinth
D: Min. worktop thickness - refer to related cooktop installation notes

Max. worktop thickness 45 mm
E: Motor at the front
F: Motor at the back
→ Fresh air supply needed for cooktop
Please refer to related cooktop installation notes

Measurements in mm

AL 200 in combination with frameless cooktop VI 492 in a single cut-out

Flush installation

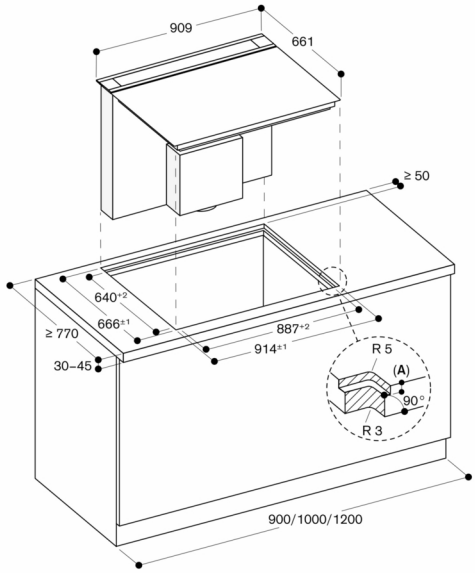

A: $6.5^{+0.5}$ mm

Measurements in mm

AL 200 in combination with frameless cooktop VI 492 in a single cut-out

Flush installation
View from above

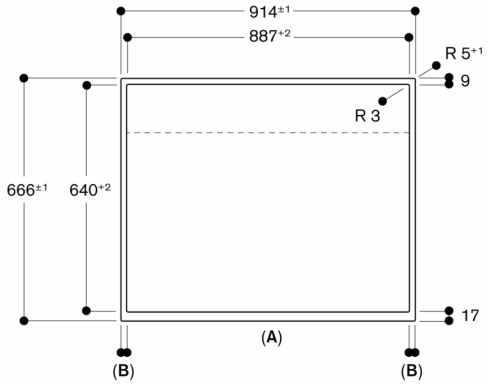

A: Front
B: 13.5 mm

Measurements in mm

AL 200 in combination with frameless cooktop VI 492 in a single cut-out

Flush installation
Longitudinal section

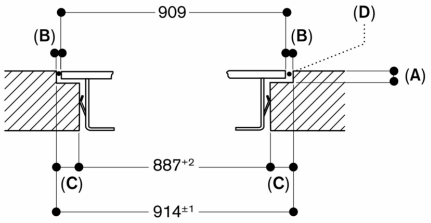

A: $6.5^{+0.5}$ mm
B: 2.5 mm
C: 13.5 mm
D: Fill with silicone

Measurements in mm

AL 200 in combination with frameless cooktop VI 492 in a single cut-out

Flush installation
Cross section

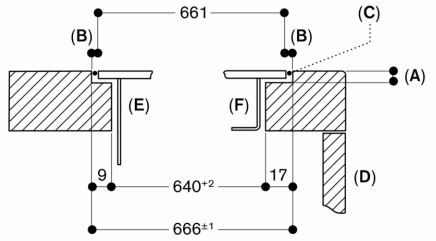

A: 6.5+0.5 mm
B: 2.5 mm
C: Fill with silicone
D: Front
E: Table ventilation
F: Induction cooktop

Measurements in mm

AL 200 in combination with frameless cooktop VI 492 in a single cut-out

Flush installation
Side view

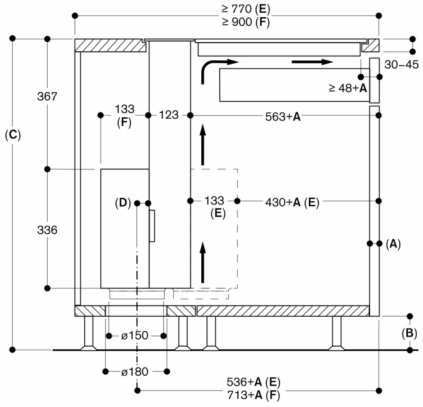

A: Front thickness
B: ≥ 60 mm for air recirculation
≥ 100 mm for air extraction with ducting in the plinth

C: ≥ 850 mm for air extraction with ducting in the plinth
D: ≥ 20 mm from the Guided Air suction area to a cabinet wall

E: Motor at the front
F: Motor at the back
➞ Fresh air supply needed for cooktop
Please refer to related cooktop installation notes

Measurements in mm

AL 200 190 with AA 200 910

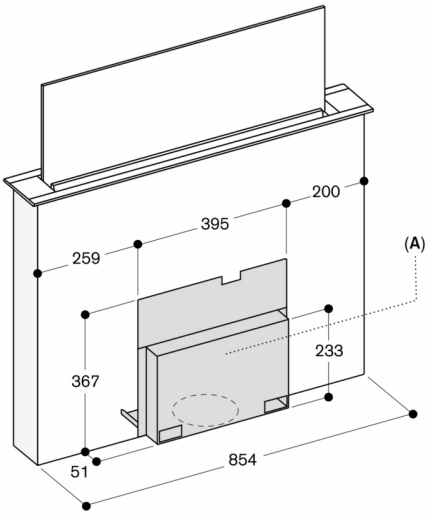

A: Access to the complete cover must be ensured even after installation

Cover can be installed on the front or the rear from the appliance

Measurements in mm

Longitudinal section

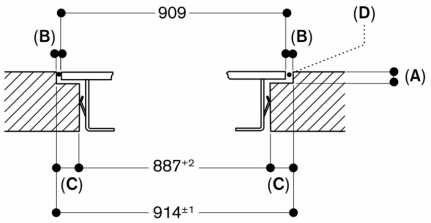

A: 6.5+0.5 mm
B: 2.5 mm
C: 13.5 mm
D: Fill with silicone

Measurements in mm

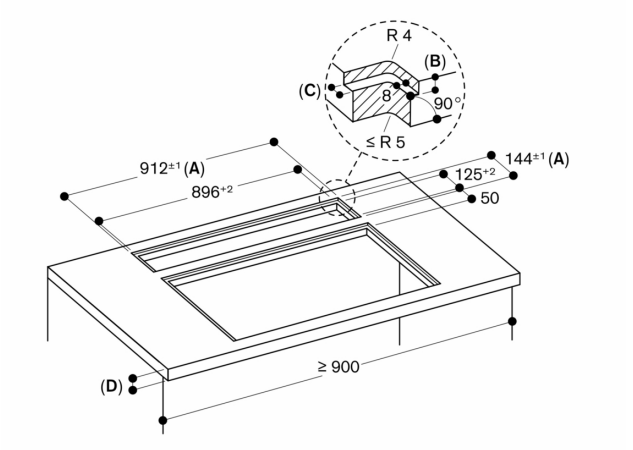

A: Incl. 2 mm silicone joint all around
B: 5.5 mm
C: 9.5 mm
D: Min. worktop thickness - refer to related cooktop installation notes

Max. worktop thickness 45 mm

Measurements in mm

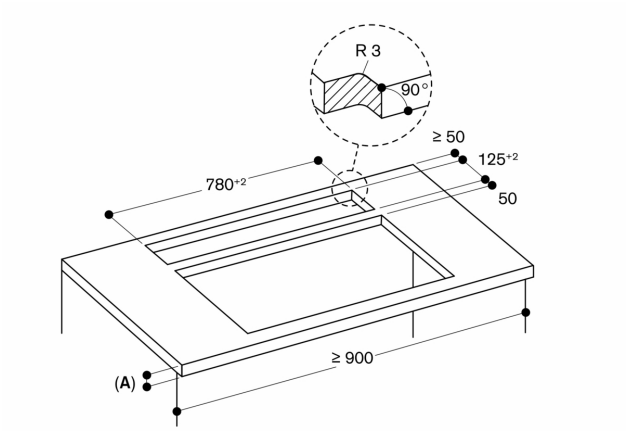

A: Min. worktop thickness - refer to related cooktop installation notes

Max. worktop thickness 45 mm

Measurements in mm

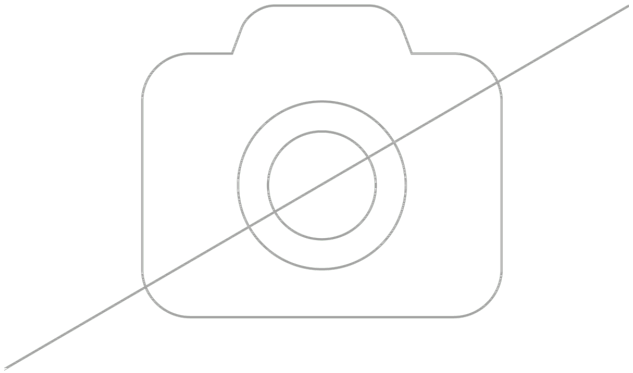

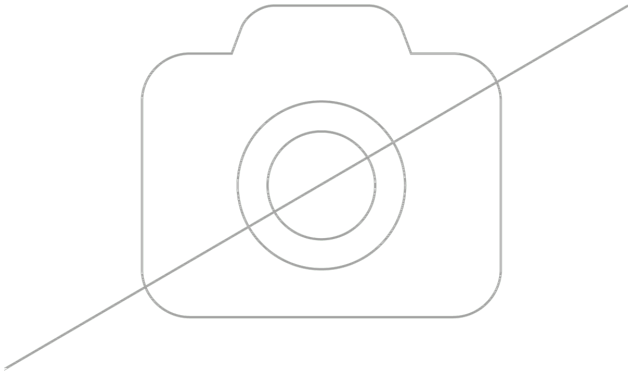

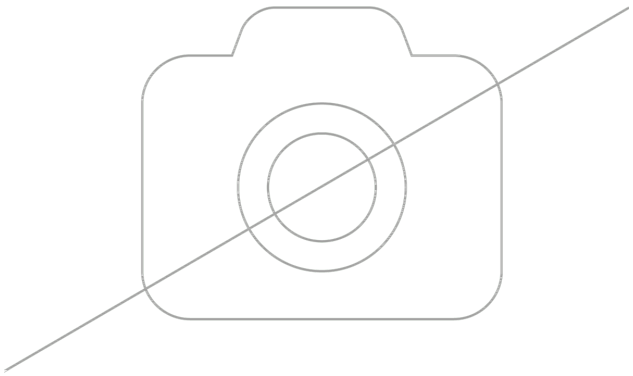

AL 200 in combination with frameless cooktop CX 492 / CI 292 in a single cut-out

Flush installation
Side view

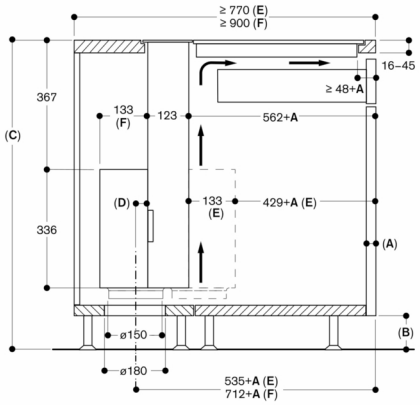

A: Front thickness
B: ≥ 60 mm for air recirculation
≥ 100 mm for air extraction with ducting in the plinth

C: ≥ 850 mm for air extraction with ducting in the plinth

D: ≥ 20 mm from the Guided Air suction area to a cabinet wall

E: Motor at the front
F: Motor at the back
→ Fresh air supply needed for cooktop
Please refer to related cooktop installation notes

Measurements in mm