AC250121

installation accessories

AA010811:
Ext.recirculation mod. ceiling st.steel

AA012811:
Ext.recirculation module ceiling White

Ceiling ventilation 200 series
120 cm, Gaggenau Light Bronze
AC250121

- Function for automatic, sensor-controlled power adjustment depending on the build-up of cooking vapours
- Perforated stainless steel grease filters with high grease absorption rateDiscreet integration into the architecture of the kitchen

Rim extraction
Function for automatic, sensor-controlled power adjustment depending on the build-up of cooking vapours
Easy and time saving installation directly on the ceiling

Output

Performance and noise level, output level 3/Intensive:
Air output according to EN 61591.
Sound power level according to EN 60704-3.
Air extraction:
458 / 933m³/h.
56 / 70 dB (A) re 1 pW.
Air recirculation:
419 / 637m³/h.
63 / 72 dB (A) re 1 pW.

Features

Three electronically controlled power levels and an intensive mode.
Remote control is included in delivery.
Automatic function with sensor-controlled run-on function.
Interval ventilation, 6 min.
Grease filter saturation indicator.
Activated charcoal filter saturation indicator.
Metal grease filter, dishwasher-safe.
Fan technology with brushless DC motor (BLDC).
Turnable blower, air outlet on all four sides possible.
Connection piece DN 150 cylindrical.

Selected digital services (Gaggenau Home Connect)

Cooktop-based ventilation control (with suitable cooktop).
Remote control and monitoring.
Remote diagnostics.
Integrated WiFi module for digital services (Home Connect).
The availability of the Home Connect functionality depends on the availability of the Home Connect Services in your country. Home Connect Services are not available in every country – for further information please check: www.home-connect.com

Product rating

Energy efficiency class A+ at a range of energy efficiency classes from A+++ to D.
Energy consumption 35.2 kWh/year.
Ventilation efficiency class A.
Grease filter efficiency class E.
Sound level min. 41 dB / max. 56 dB normal mode.

Planning notes

The equivalent ducting length to ensure good performance is Lmax 23 m.
For optimum extraction performance, the maximum distance between the cooktop and the ventilation appliance is 120 cm.
In this case the maximum width of cooktops combination is 100 cm.
Adding a frame or a fume collector, the maximum width of cooktops combination is 130 cm.
The ceiling ventilation has to be handled as a room ventilation when distance to cooktop is larger than 120 cm since the direct capture of vapours will be limited.
Please consider to consult an HVAC (Heating and ventilation air conditioning) specialist.
For installation in suspended ceiling.
A suitable load-bearing substructure is required for securing the hood. Never fit the appliance directly onto plasterboard or similar lightweight construction materials.
Recommended minimum gap between appliance and external filter module:100 cm.
For air recirculation an external air recirculation module is required.
Clearance above gas appliances min. 65 cm(more than total load gas 12 kW min. 70 cm).
Clearance above electric appliances min. 65 cm.
When installing a ventilation hood with air extraction mode and a chimney-vented fireplace, the hood's power supply line needs to feature a suitable safety switch.
Appliance weight: approx. 26.

Connection

Total connected load 250 W.
Connecting cable 1.3 m with plug.
Power consumption standby/display off 0.5 W.
Please check the user manual for how to switch off the WiFi module.

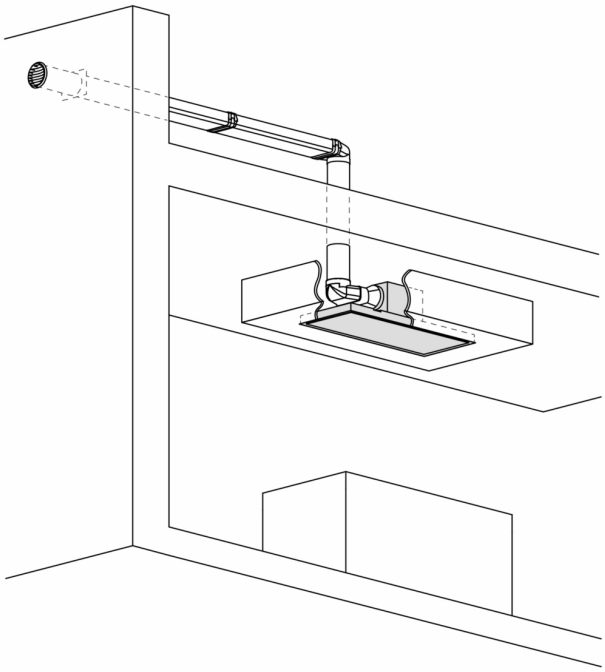

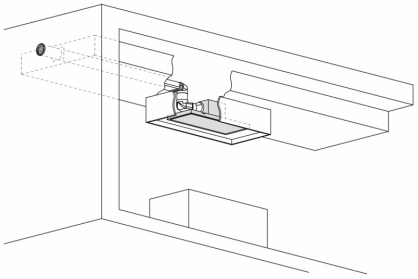

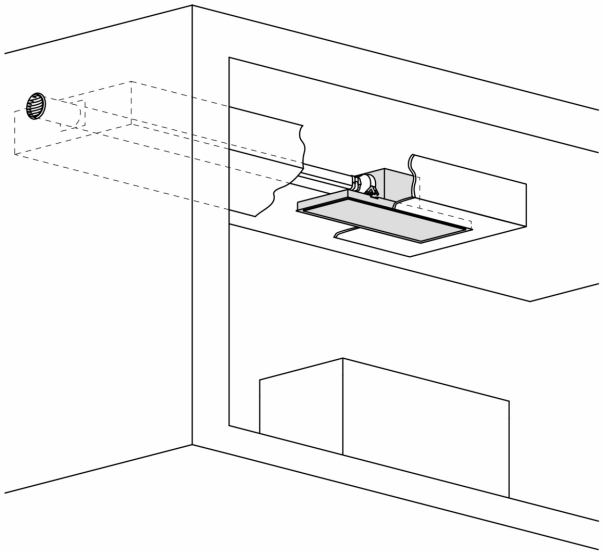

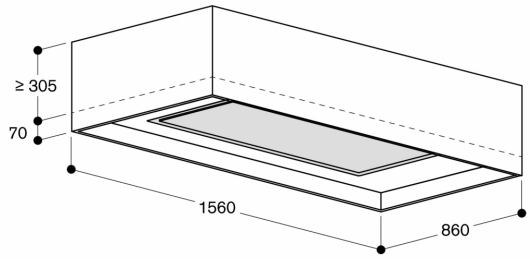

Measurements in mm

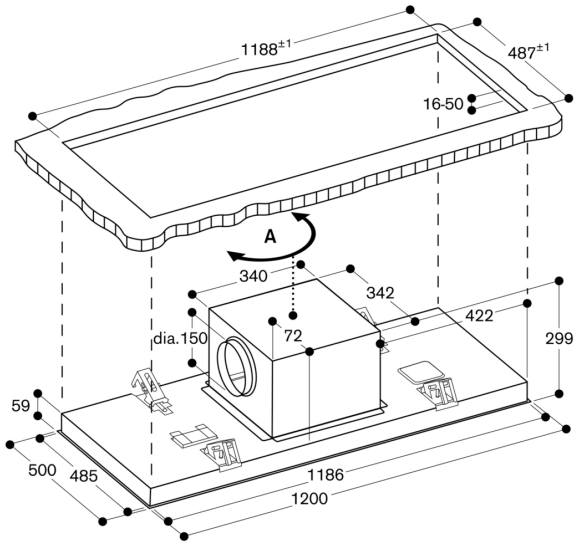

A:The ventilator outlet can be turned in all four directions.
measurements in mm

AC 250 with air recirculation module

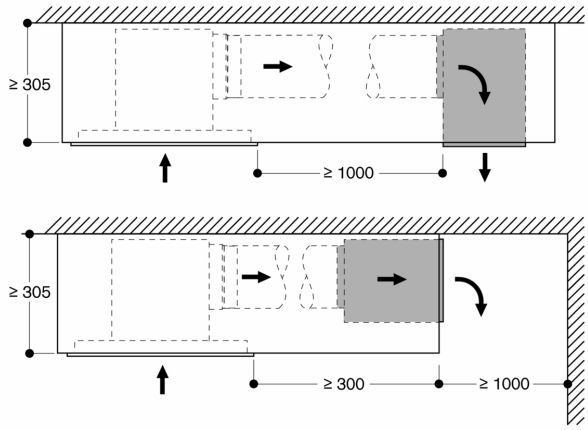

measurements in mm